VHF APCO P25 TRANSCEIVER

TK-5210

SERVICE MANUAL

KENWOOD

© 2004-11 PRINTED IN JAPAN
B51-8703-00 (S) 658

TK-5210 K **TK-5210 K2** **TK-5210 K3**

Does not come with antenna. Antenna is available as an option.

CONTENTS

GENERAL 2
SYSTEM SET-UP 2
REALIGNMENT 3
DISASSEMBLY FOR REPAIR 8
CIRCUIT DESCRIPTION 13
TERMINAL FUNCTION 19
SEMICONDUCTOR DATA 23
COMPONENTS DESCRIPTION 25
PARTS LIST 27
EXPLODED VIEW 37
PACKING 39
ADJUSTMENT 40
PC BOARD
TX-RX UNIT (X57-6820-XX) 54
SCHEMATIC DIAGRAM 62
INTERCONNECTION DIAGRAM 74
BLOCK DIAGRAM 75
LEVEL DIAGRAM 78
OPTIONAL ACCESSORIES
KNB-31A/32N/33L 79
KSC-32 79
SPECIFICATIONS ..... **BACK COVER**

GENERAL / SYSTEM SET-UP

INTRODUCTION

SCOPE OF THIS MANUAL

This manual is intended for use by experienced technicians familiar with similar types of commercial grade communications equipment. It contains all required service information for the equipment and is current as of the publication date. Changes which may occur after publication are covered by either Service Bulletins or Manual Revisions. These are issued as required.

ORDERING REPLACEMENT PARTS

When ordering replacement parts or equipment information, the full part identification number should be included. This applies to all parts : components, kits, or chassis. If the part number is not known, include the chassis or kit number of which it is a part, and a sufficient description of the required component for proper identification.

PERSONNEL SAFETY

The following precautions are recommended for personnel safety:

- DO NOT transmit until all RF connectors are verified secure and any open connectors are properly terminated.
- SHUT OFF and DO NOT operate this equipment near electrical blasting caps or in an explosive atmosphere.
- This equipment should be serviced by a qualified technician only.

SERVICE

This transceiver is designed for easy servicing. Refer to the schematic diagrams, printed circuit board views, and alignment procedures contained within.

Model & Destination (Market code) / Unit		X57-682X-XX			Frequency range	Remarks	LCD	4-key	DTMF keypad
		0-10	0-11	0-12					
TK-5210	K	✓			136~174 MHz	1st IF:49.95MHz LOC:50.4MHz	–	–	–
	K2		✓				✓	✓	–
	K3			✓			✓	✓	✓

SYSTEM SET-UP

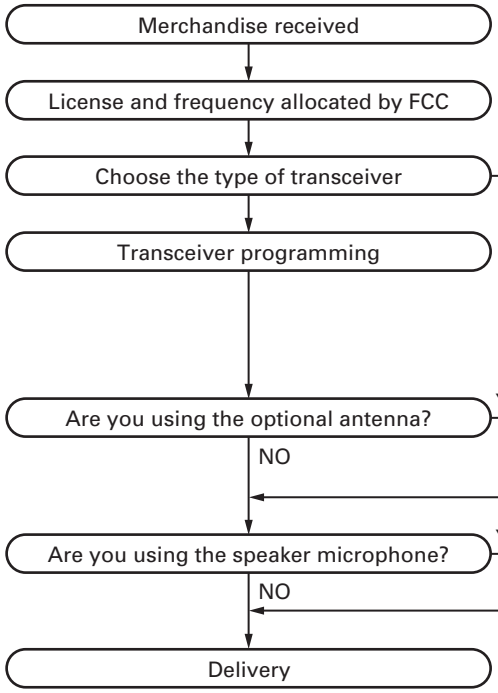

Frequency range (MHz)	RF power	Type	LCD	4-key	DTMF keypad
TX/RX 136~174	5W	TK-5120 K	No	No	No
TX/RX 136~174	5W	TK-5120 K2	Yes	Yes	No
TX/RX 136~174	5W	TK-5120 K3	Yes	Yes	Yes

A personal computer (IBM PC or compatible), programming interface (KPG-36), and programming software (KPG-95D) are required for programming.
(The frequency, and signaling data are programmed for the transceiver.)

REALIGNMENT

1. Modes

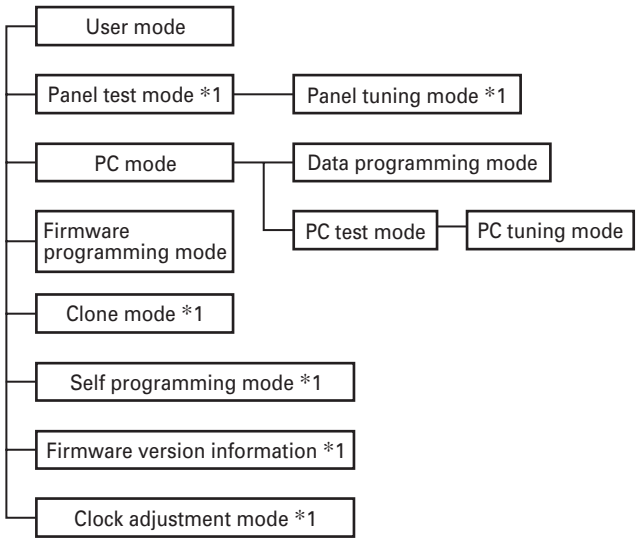

Mode	Function
User mode	For normal use.
Panel test mode *1	Used by the dealer to check the fundamental characteristics.
Panel tuning mode *1	Used by the dealer to tune the transceiver.
PC mode	Used for communication between the transceiver and PC (IBM compatible).
Data programming mode	Used to read and write frequency data and other features to and from the transceiver.
PC test mode	Used to check the transceiver using the PC. This feature is included in the FPU. See panel tuning.
Firmware programming mode	Used when changing the main program of the flash memory.
Clone mode *1	Used to transfer programming data from one transceiver to another.
Self programming mode *1	Frequency, signaling and features write to the transceiver.
Firmware version information *1	Used to confirm the internal firmware version.
Clock adjustment mode *1	Used by the dealer to adjust date and time.

*1 : K2 and K3 models only

2. How to Enter Each Mode

Mode	Operation
User mode	Power ON
Panel test mode *2	Press and hold the [Side3] and [PTT] keys while turning the transceiver power on and then release the [PTT] key first.
PC mode	Received commands from PC
Panel tuning mode *2	Press the [Side3] key, in Panel test mode
Firmware programming mode	Press and hold the [Side3] and [PTT] keys while turning the transceiver power on and then release the [Side3] key first.
Clone mode *2	Press and hold the [Side2] and [PTT] keys while turning the transceiver power on and then release the [Side2] key first.
Self programming mode *2	Press and hold the [Side2] and [PTT] keys while turning the transceiver power on and then release the [PTT] key first.
Firmware version information *2	Press and hold the [Side3] key while turning the transceiver power on.
Clock adjustment mode *2	Press and hold the [Orange] and [PTT] keys while turning the transceiver power on and then release the [Orange] key first.

*2 : K2 and K3 models only

3. Panel Test Mode (K2 and K3 models only)

Setting method refer to ADJUSTMENT.

4. Panel Tuning Mode (K2 and K3 models only)

Setting method refer to ADJUSTMENT.

REALIGNMENT

5. PC Mode

5-1. Preface

The transceiver is programmed by using a personal computer, programming interface (KPG-36) and programming software (KPG-95D).

The programming software can be used with an IBM PC or compatible. Figure 1 shows the setup of an IBM PC for programming.

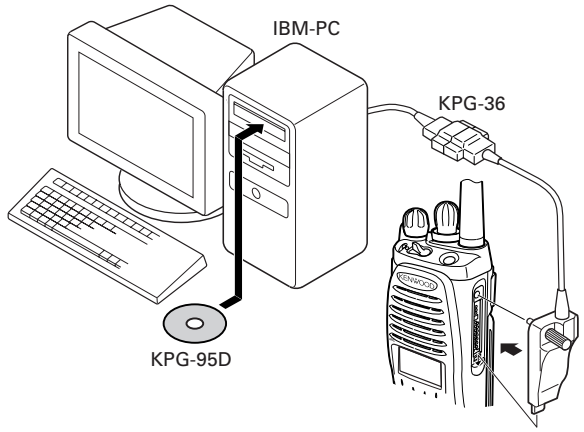

Fig. 1

5-2. Connection procedure

1. Connect the transceiver to the personal computer with the interface cable.
2. When the POWER switch on, user mode can be entered immediately. When PC sends command the transceiver enter PC mode, and "PROGRAM" is displayed on the LCD.
   When data transmitting from transceiver, the red LED is lights.
   When data receiving to transceiver, the green LED is lights.

Notes:

- The text message are displayed for K2 and K3 models only.
- The data stored in the personal computer must match "Model Name and Market Code", when it is written into the EEPROM and flash memory.

5-3. KPG-36 description (PC programming interface cable: Option)

The KPG-36 is required to interface the transceiver to the computer. It has a circuit in its D-sub connector (25-pin) case that converts the RS-232C logic level to the TTL level.

The KPG-36 connects the universal connector of the transceiver to the computers RS-232C serial port.

5-4. Programming software KPG-95D description

The KPG-95D is the programming software for the transceiver supplied on a CD-ROM. This software runs under MS-Windows 98, ME, Windows 2000 or XP on an IBM-PC or compatible machine.

The data can be input to or read from the transceiver and edited on the screen. The programmed or edited data can be printed out. It is also possible to tune the transceiver.

6. Firmware Programming Mode

6-1. Preface

Flash memory is mounted on the transceiver. This allows the transceiver to be upgraded when new features are released in the future. (For details on how to obtain the firmware, contact Customer Service.)

6-2. Connection procedure

Connect the transceiver to the personal computer (IBM PC or compatible) with the interface cable (KPG-36). (Connection is the same as in the PC Mode.)

6-3. Programming

1. Start up the firmware programming software (Fpro.exe).
2. Set the communications speed (normally, 115200 bps) and communications port in the configuration item.
3. Set the firmware to be updated by File name item.
4. Press and hold the [Side3] and [PTT] keys while turning the transceiver power on and then release the [Side3] key first. Then, the orange LED on the transceiver lights and the baud rate is displayed as follows according to the position of the Concentric switch.
   A: PROGRAM 115200 bps
   B: PROGRAM 57600 bps
   C: PROGRAM 19200 bps
   Since the baud rate is normally set to 115200 bps, change the Concentric switch to "A".
5. Check the connection between the transceiver and the personal computer, and make sure that the transceiver is in the Program mode.
6. Press "write" button in the window. When the transceiver starts to receive data, the [PG] display lights.
7. If writing ends successfully, the checksum is calculated and a result is displayed.
8. If you want to continue programming other transceivers, repeat steps 4 to 7.

Notes:

- This mode cannot be entered if the Firmware Programming mode is set to Disable in the Programming software.
- The text message are displayed for K2 and K3 models only.

6-4. Baud rate change

1. Change baud rate by changing the Concentric switch position. The baud rates are assigned to positions of the Concentric switch as follows:
   A: PROGRAM 115200 bps
   B: PROGRAM 57600 bps
   C: PROGRAM 19200 bps
2. If you press the [Side1] switch (top of left side) while the baud rate (such as "PROGRAM 115200 bps") is displayed, the checksum is calculated, and a result is displayed. If you press the [Side1] switch again while the checksum is displayed, the baud rate (such as "PROGRAM 115200 bps") is redisplayed.

Notes:

- Normally, write in the high-speed mode.
- The text message are displayed for K2 and K3 models only.

REALIGNMENT

7. Clone Mode (K2 and K3 models only)

Programming data can be transferred from one transceiver to another by connecting them via their external universal connectors. The operation is as follows (the transmit transceiver is the master and the receive transceiver is a slave).

The following data cannot be cloned.

- Tuning data
- Embedded message with password
- Model name data
- ESN data

Key guide on the "INPUT PASSWORD" display.

- CNF([A] key): The password confirmation
- DEL([B] key): Delete the least digit from the current password number
- SET([D] key): Determine the least digit of the password number

1. Press and hold the [Side2] and [PTT] keys while turning the transceiver power on and then release the [Side2] key first. If the Read authorization password is set to the transceiver, the transceiver displays “CLONE LOCK”. If the password is not set, the transceiver displays “CLONE MODE”.
2. When you enter the correct password, and “CLONE MODE” is displayed, the transceiver can be used as the cloning master. The following describes how to enter the password.
3.
   - How to enter the password using the keypad (K3 model only);
     If the [D] key is pressed while "CLONE LOCK" is displayed, the Read authorization password input screen (INPUT PASSWORD) is displayd.
     If one of keys 0 to 9 is pressed while "INPUT PASSWORD" is displayed, the pressed number is displayed on the LCD. Each press of the key shifts the display in order to the left. When you enter the password and press the [A] or [✳] key, “CLONE MODE” is displayed if the entered password is correct. If the password is incorrect, “CLONE LOCK” is redisplayed.
   - How to enter the password using the [Side2] and [Side3] keys (K2 and K3 models);
     If the [D] key is pressed while "CLONE LOCK" is displayed, the Read authorization password input screen (INPUT PASSWORD) is displayd.
     If the [Side2] key or [Side3] key is pressed while "INPUT PASSWORD" is displayed, the number (0 to 9) flashes on the LCD. When you press the [D] key, the currently selected number is determined. If you press the [A] key after entering the password in this procedure, “CLONE MODE” is displayed if the entered password is correct. If the password is incorrect, “CLONE LOCK” is redisplayed.
4. Power on the slave transceiver.
5. Connect the cloning cable (part No. E30-3325-05) to the universal connectors on the master and slave.
6. Press the [Side1] or [A] key on the master while the master displays “CLONE MODE”. The data of the master is sent to the slave. While the slave is receiving the data, “PROGRAM” is displayed. When cloning of data is completed, the master displays “END”, and the slave automatically operates in the User mode. The slave can then be operated by the same program as the master.
7. The other slave can be continuously cloned. When the [Side1] or [A] key on the master is pressed while the master displays “END”, the master displays “CLONE MODE”. Carry out the operation in step 4 to 6.

Notes:

- Can not be cloned if the password (over write password) is programmed to the slave.
- "Model Name and Market Code" must be same to clone the transceiver. However, it may be unable to clone the transceiver depending on the enhanced features settings. (Refer to the FPU for the enhanced features details.)

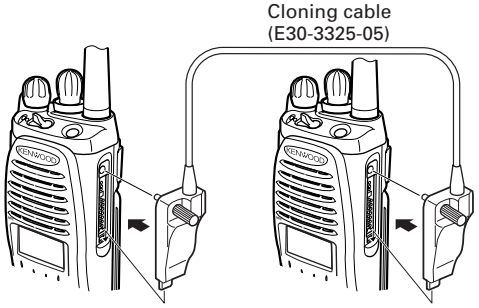

Fig. 2

8. Self Programming Mode

(K2 and K3 models only)

Write mode for frequency data and signaling etc. To be used ONLY by the authorized service person maintaining the user's equipment. After programming, reset the FPU to the "Self- Programming" disabled mode. Transceivers CANNOT be delivered to the end-user in the self-programming mode.

The following setup items in the channels programmed by the FPU can be changed using the self-programming mode. The addition of new channel and the deletion of channel that has already been programmed by the FPU cannot be performed using the self-programming mode.

- RX frequency
- TX frequency
- Channel type
- TX mode (When the channel type is selected "MIXED".)
- Channel spacing
- RX signaling
- TX signaling
- RX NAC
- TX NAC
- Talkgroup list number

Note:

The personality will be also changed when the above-mentioned items is changed. (Refer to the FPU for the personality details.)

Key guide on the "INPUT PASSWORD" display.

- CNF([A] key): The password confirmation
- DEL([B] key): Delete the least digit from the current password number

REALIGNMENT

- SET([D] key): Determine the least digit of the password number

8-1. Enter to the self programming mode

Press and hold the [Side2] and [PTT] keys while turning the transceiver power on and then release the [PTT] key first. Ignoring whether the Read authorization password is set or not, "INPUT PASSWORD" appears.

If the Read authorization password is not set to the transceiver, "SELF PROG MODE" is displayed on the LCD when the [A] key is pressed while "INPUT PASSWORD" is displayed.

If the password is set to the transceiver, "SELF PROG MODE" is displayed on the LCD when you enter the correct password while "INPUT PASSWORD" is displayed.

For the password input method, see "7.Clone Mode" step 3 described on page 5.

Note :

This mode (self programming mode) cannot be set when it has been disabled with the FPU.

8-2. Data Writing

If the [Side3] key is pressed while Zone/Channel mode is displayd, new data is written into memory. "Writing" is displayed while the transceiver is writing data.

The setup items for self programming mode are as follows.

No.	Setup item	Display	Remarks
1	Select Zone/Channel	ZONE [**] -CH *** ZONE ** -CH [***]	Zone : 1~50 CH : 1~250
2	RX frequency	RX Freq	Receive frequency
3	TX frequency	TX Freq	Transmit frequency
4	Channel type	CH Type	ANALOG/APCO/MIXED
5	TX mode	TX Mode	ANALOG/APCO
6	Channel spacing	CH Space	25.0kHz/12.5kHz (When the Channel type is selected "ANALOG" or "MIXED".) APCO 12.5kHz/12.5kHz (When the Channel type is selected "APCO".)
7	RX Signaling	RX Sig	Receive QT/DQT
8	TX Signaling	TX Sig	Transmit QT/DQT
9	RX NAC	RX NAC ***	000~FFF (Hexadecimal)
10	TX NAC	TX NAC ***	000~FFF (Hexadecimal)
11	Talkgroup list number	TG List No. ***	1~250

Key operation

Key \ Item	Zone-Channel	RX Frequency	TX Frequency	Channel Type	TX Mode	Channel Spacing	RX Signaling	TX Signaling
[A]	Go to the next item							
[B]	Zone/Channel switching	2.5kHz/5kHz/6.25kHz/ 7.5kHz/1MHz step switching		Unused			QT/DQT(N)/DQT(I)/OFF switching	
[C]	Zone/Channel down	1 step down		ANALOG/APCO/MIXED switching(Back)	ANALOG/APCO switching(Back)	Channel spacing switching(Back)	Signaling down	
[D]	Zone/Channel up	1 step up		ANALOG/APCO/MIXED switching(Forward)	ANALOG/APCO switching(Forward)	Channel spacing switching(Forward)	Signaling up	
[Side3]	Data writing	Unused	ON/OFF switching	Unused			1 step/Standard switching	

Key \ Item	RX NAC	TX NAC	TG List No.
[A]	Go to the next item		
[B]	Delete the least digit from the current number (Press and hold to delete all numbers.)		Unused
[C]	Unused		TG List number down
[D]	Determine the least digit		TG List number up
[Side2]	Increment a number in the specified digit		Unused
[Side3]	Decrement a number in the specified digit		Unused
Keypad (K3 model only)	Add a digit to the current number		Unused

REALIGNMENT

- **Self programming mode flow chart**

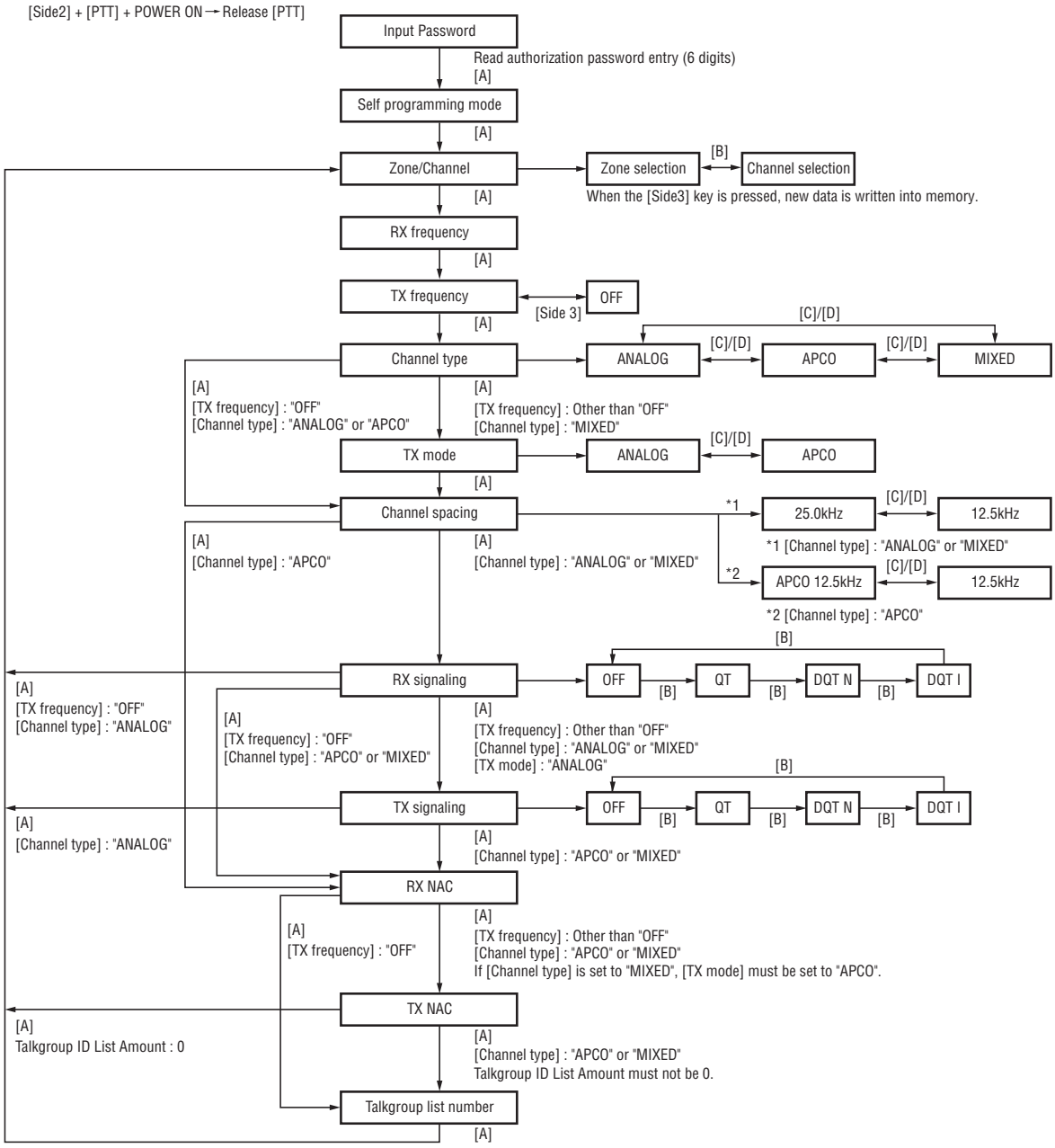

9. Firmware Information Mode

(K2 and K3 models only)

Turn the transceiver ON with the [Side3] key held down. Then, the version is displayed during holding the [Side3] key.

10.Clock Adjustment Mode

(K2 and K3 models only)

10-1. Flow chart of operation

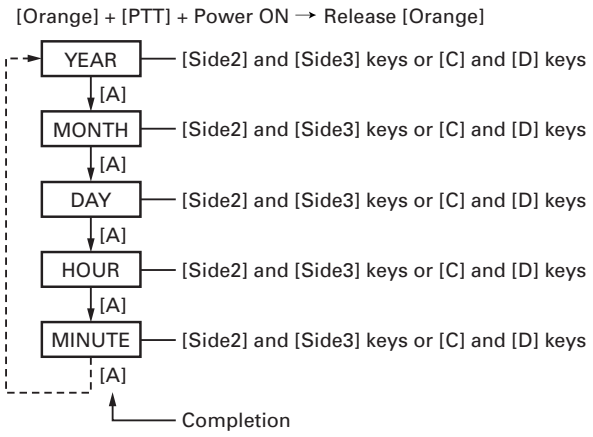

DISASSEMBLY FOR REPAIR

Disassembly Procedure

■ Removing the front case from the chassis.

1. Remove the rear panel with a flat-head screwdriver. Insert the screwdriver between the rear panel (right side) and the chassis (the place next to the "△" mark shown on the chassis), push it in the direction of the arrow ①, and remove the right side of the rear panel. Repeat the above action for the left side of the rear panel ②.

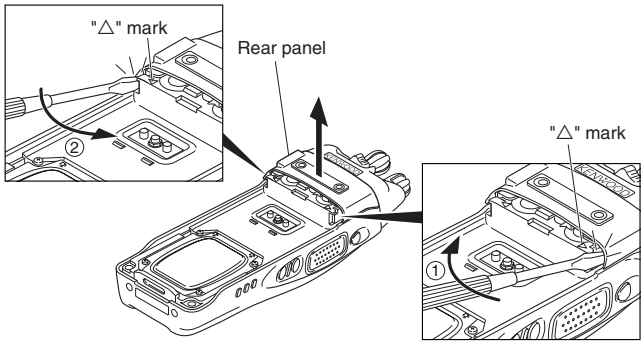

2. Remove the four screws ③ and universal connector cap ④.
3. Lift the battery pack release latch on the bottom of the chassis ⑤ and remove the chassis from the front case.

Notes:

- Lift the chassis from the front case slowly and carefully. If the chassis is lifted suddenly, the SP/MIC FPC may be pulled and the connector may become damaged.
- Handle the main packing with care. It is likely to collect dust and dirt.

4. Remove the SP/MIC FPC from the CONTROL PCB connector (CN603). ⑥

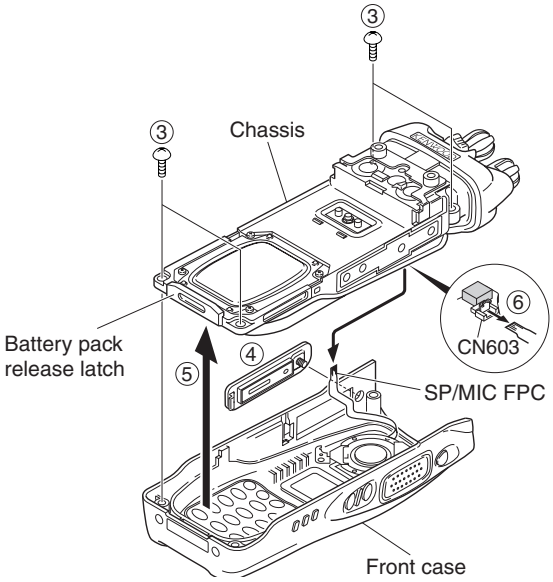

■ Removing the CONTROL PCB (X57-682 B/5) from the chassis.

1. Remove the six screws ⑦.

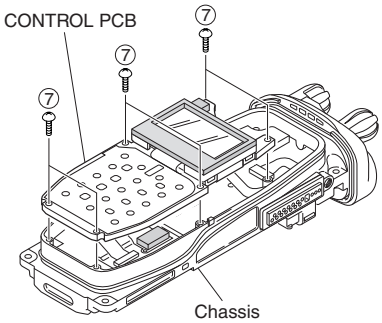

2. On the reverse side of the CONTROL PCB ⑧, remove the cord ASSY and each FPC from the connectors (CN601, CN604 (K2 and K3 models only), CN752, CN753) of the CONTROL PCB.

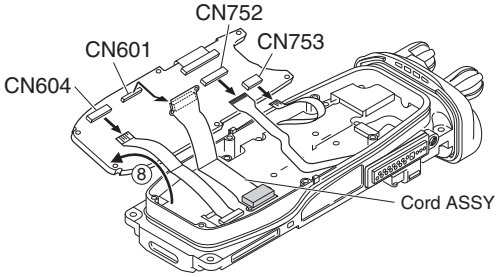

■ Removing the TX-RX PCB (X57-682 A/5) from the chassis.

1. Remove the 14 screws ⑨.
2. Remove the universal connector FPC from the TX-RX PCB connector (CN7) ⑩.
3. Insert the two tips of a pair of tweezers into the two holes in the bottom of the shield plate of the TX-RX PCB, firmly squeeze the tweezers to hold the shield plate, then remove the TX-RX PCB ⑪.
4. Remove the coaxial cables from the two connectors (MAIN (CN101), UNIV (CN102)) of the TX-RX PCB ⑫.

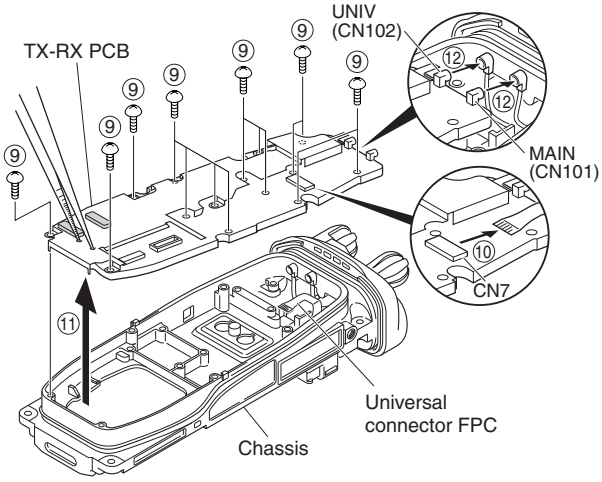

DISASSEMBLY FOR REPAIR

■ Removing the top panel from the chassis.

1. Remove the volume knob ⑬ and channel knob ⑭.
2. Remove the concentric switch knob ⑮.
3. Remove the volume torque-up packing ⑯ using a pair of tweezers.
4. Remove the nuts from the volume knob, channel knob and antenna receptacle.
5. Remove the top panel ⑰.

Notes:

- Before removing the top panel, set the lever switch to the "●" position (circle painted in white) ⑱.
- Each of the volume knob, channel knob and antenna receptacle on the top panel has an O-ring. Take care not to lose them after removing the panel.

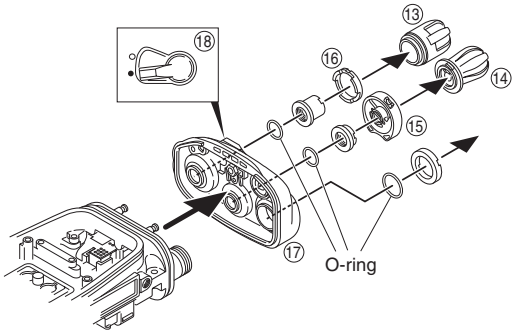

■ Removing the TOP PCB (X57-682 C/5) from the chassis.

1. Remove the two screws ⑲.
2. Lift the TOP PCB and remove the VOL/CH FPC ⑳ and CONTROL-TOP FPC ㉑ from the two connectors (CN902, CN903) of the TOP PCB.

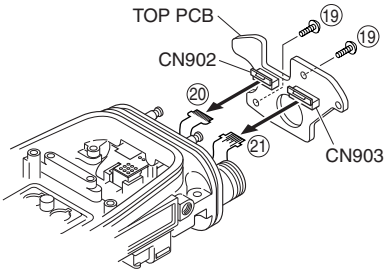

Precautions for Reassembly

■ Installing the VOL/CH FPC and CONTROL-TOP FPC on the TOP PCB

1. Remove the volume ① and channel switch ② from the chassis.
2. Position the coaxial cable connecting the ANT PCB and TX-RX PCB as shown in the figure below.

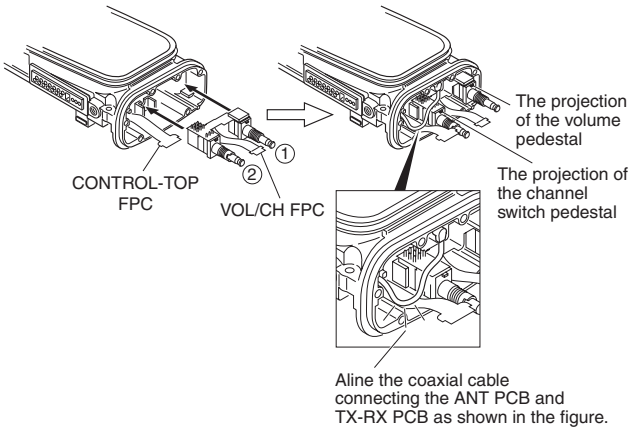

3. Pass the coaxial cable ③ of the antenna receptacle through the round hole of the hardware fixture ④, then insert it into the coaxial connector (MAIN (CN101)) of the TX-RX PCB.

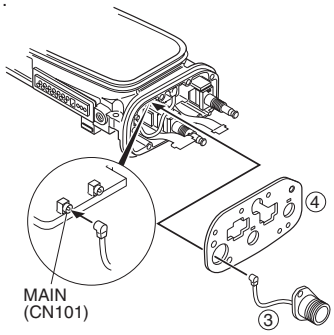

4. Pass the volume, channel switch, VOL/CH FPC and CONTROL-TOP FPC through hardware fixture holes, then bring the hardware fixture into contact with the chassis and fix it with a screw ⑤.

Note:

The projections of the volume and channel switch pedestals must protrude from the square holes of the hardware fixture.

5. Fix the antenna receptacle with the two screws ⑥.
6. Fix the hardware fixture with a screw ⑦.

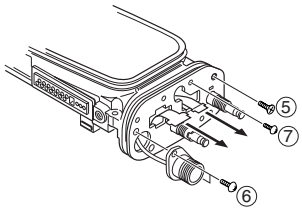

DISASSEMBLY FOR REPAIR

7. Insert the VOL/CH FPC ⑧ and the CONTROL-TOP FPC ⑨ into the connectors (CN902, CN903) of the TOP PCB.
8. Fix the TOP PCB with a screw ⑩.
9. Fix the TOP PCB with a screw ⑪.

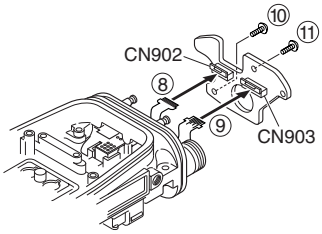

■ TX-RX PCB Installation Procedure

1. Insert the coaxial cable of the antenna receptacle into the coaxial connector (CN101) of the TX-RX PCB ① and the coaxial cable of the ANT PCB into the coaxial connector (CN102) of the TX-RX PCB ②.
2. Grasp both sides of the lower part of the TX-RX PCB, tilt the TX-RX PCB and install the chassis so that the PTT FPC ③, CONTROL-TOP FPC ④ and universal connector FPC ⑤ are not caught ⑥.
3. Fix the TX-RX PCB with the 14 screws.

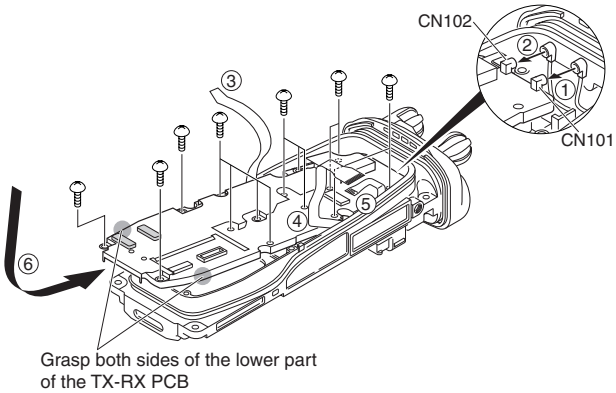

■ LCD ASSY Installation Procedure (K2 and K3 models only)

1. Remove the two adhesive sheets attached to the CONTROL PCB, and attach the new adhesive sheets to the location as shown in the following figure.

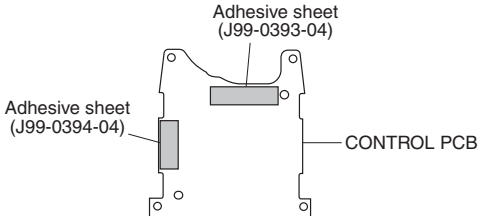

2. Fold the LCD ASSY FPC to the back of the holder ① so that the FPC is between the two tabs on the right side of the holder ②.

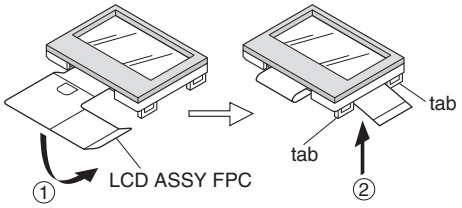

3. Fit the two tabs on the right side of the holder ③ and the two tabs on the left side of the holder ④ into the CONTROL PCB.

Note:
Take care that the FPC is not caught when fitting the two tabs on the right side of the holder.

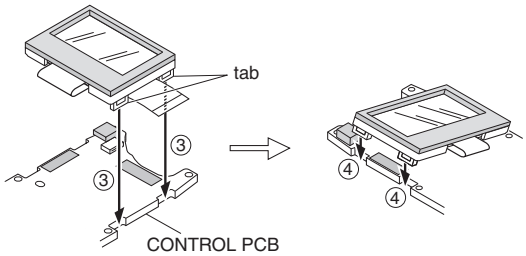

4. Insert the FPC into the CONTROL PCB connector (CN751) ⑤.

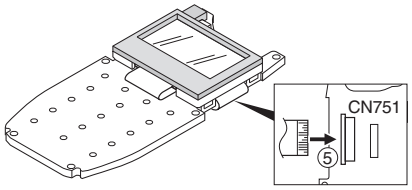

■ Main Packing (G53-1637-04) Installation Procedure

1. Hook the packing (coated with silicon oil) in the upper groove of the chassis ①, then fit the packing into the lower groove of the chassis ②.

Note:
Ensure that the chassis grooves and packing are free from dirt and dust.

2. Fit the packing into the grooves on both sides of the chassis ③. (Fit the packing into the groove in the chassis by tracing it lightly with your fingers.)

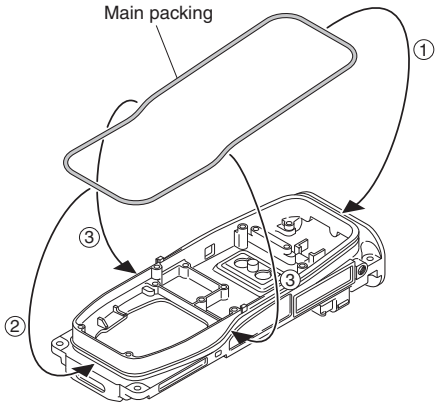

Note:
To remove the packing from the chassis groove, use a resin adjustment bar or other such device. If the packing is pried with a sharp metallic tool, such as tweezers, the packing may become damaged.

3. Verify that the packing fits snuggly into the groove of the chassis.

DISASSEMBLY FOR REPAIR

■ Top Packing (G53-1638-04) Installation Procedure

1. Ensure that the hardware fixture is first secured to the chassis.
2. Hook the packing (coated with silicon oil) in the upper left groove of the chassis ①, then fit the packing into the right groove of the chassis. ②

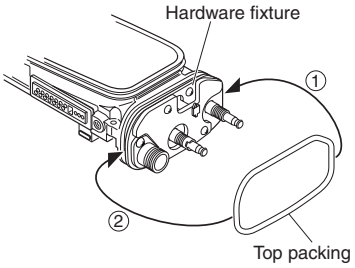

Notes:

- Verify that the chassis grooves and packing are free from dirt and dust.
- To remove the packing from the chassis groove, use a resin adjustment bar or other such device. If the packing is pried with a sharp metallic tool, such as tweezers, the packing may become damaged.

3. Verify that the packing fits snuggly into the groove of the chassis.

■ Volume Torque-up Packing (G53-1628-04) Installation Procedure

Insert the packing using a pair of tweezers so that the hollow of the packing fits the convex of the panel ①.

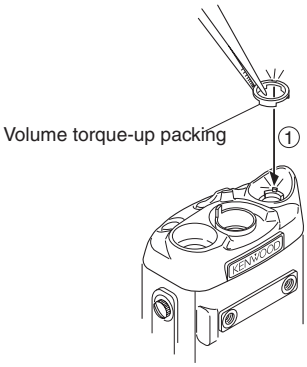

■ Screw sequence for mounting the battery terminal block to the chassis.

Attach the battery terminal block to the chassis as described in the following procedure.

1. Loosely fix the hexagon screws of the GND terminal to the chassis (enough so that the hexagon screws do not move).

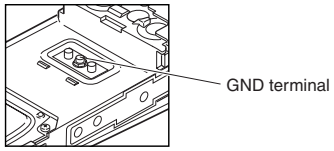

2. Tighten the two screws from the TX-RX PCB side.

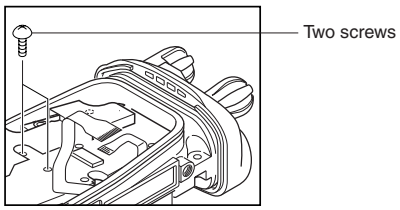

3. Firmly tighten the hexagon screws of the GND terminal.

Installation Procedure during Parts Replacement

■ Attaching the Sheet (G10-1338-04, J99-0383-14) to the Front Case Speaker and Installation of the Packing (G53-1633-04)

1. Attach a new fiber sheet ① (G10-1338-04) so that its convex fits the hollow of the front case ②.
2. Attach a new pressure sensitive adhesive sheet ③ (J99-0383-14) so that its convex fits the hollow of the front case ④.
3. Remove the separation sheet from the pressure sensitive adhesive sheet with a pair of tweezers ⑤.
4. Fit the packing ⑥ (G53-1633-04) into the front case speaker.

Note:

Fit the packing into the hollow of the case so that the two low-height places in the convex of the packing are positioned on the lower side ⑦.

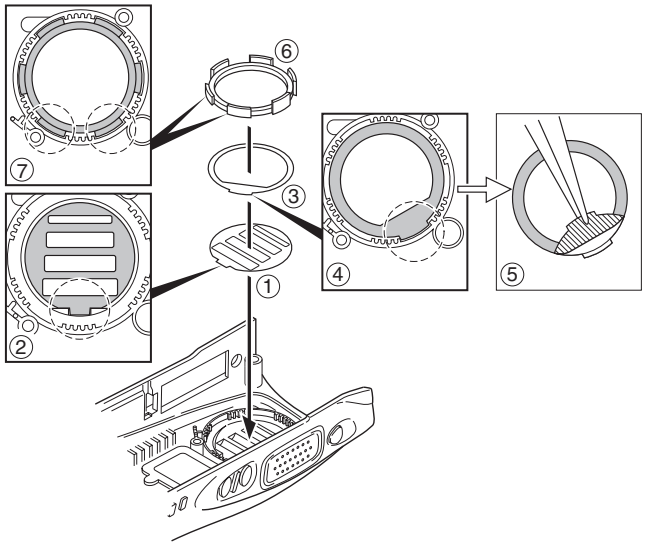

5. Verify that the packing does not ride on the rib of the case.

DISASSEMBLY FOR REPAIR

■ Installing a new LCD ASSY to the holder (K2 and K3 models only)

1. Remove the separation paper (brown) from the new sheet ① ②, and attach the sheet to the surface of the holder ③.
2. Remove the protection sheets attached to both sides of the new LCD ASSY.
3. Remove the separation paper (white) from the sheet in step 1 ④, then attach the LCD ASSY ⑤ to the sheet.
4. Attach two pieces of double-sided adhesive tape ⑥ to the back of the holder and remove the separation paper.
5. Remove the protection sheet (transparent) attached to one side of the new filter ⑦ ⑧ and remove the protection sheet (yellow) from the other side ⑨.
6. Attach the filter from step 5 to the back of the holder.
7. Attach the new cushion ⑩ so that it fits to the corner of the holder convex.

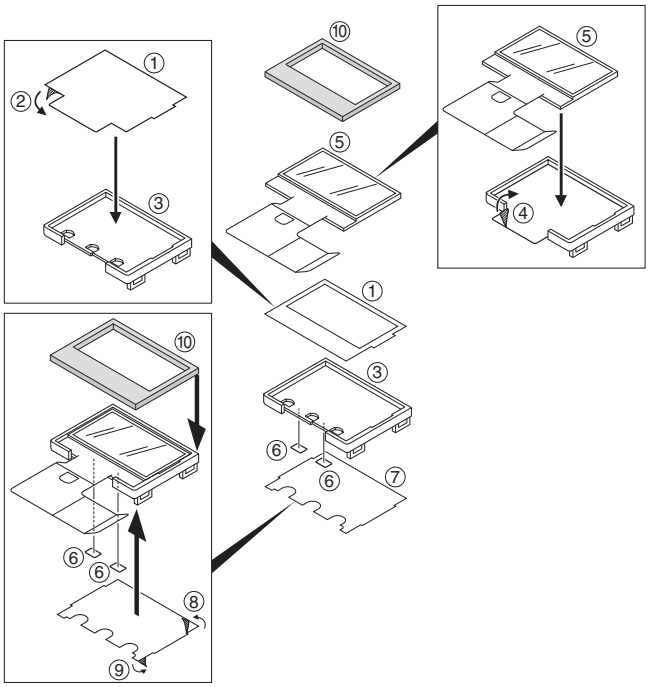

■ Preparation when Replacing the Cord ASSY (X42-3270-10)

Cut the tip of the FPC on the side on which "TX-RX" is stamped when replacing the cord ASSY.

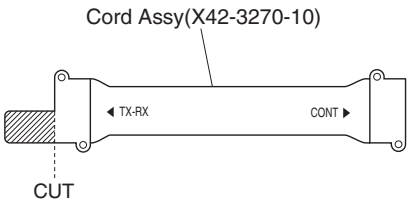

■ Procedures when Replacing the Top Panel

1. Insert the O-ring ① into the lever switch part of the new top panel.
2. Apply grease to the base of the shaft of the lever knob ② and install the lever knob so that it is in the "●" position (circle painted in white) on the top panel ③.
3. Pass the hardware fixture ④ through the shaft and install it onto the top panel.
4. Apply grease to between the two holes in the hardware fixture ④.
5. Install the hardware fixture ⑤ so that it is inserted into the hole on the left side of the hardware fixture ④.
6. Fix the two hardware fixtures with the hexagon nut ⑥.
7. Apply bond (Three Bond 1401C) to the tip of the lever knob shaft and the surface of the hexagon nut ⑦.

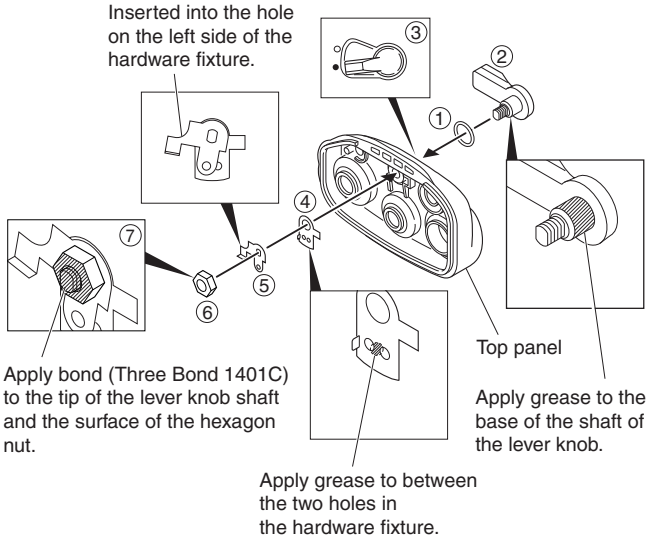

■ Volume Knob and Channel Knob Parts Replacement

Since the volume knob consists of two components, a knob ① and a spacer ②, replace and reinstall these two parts at the same time.

Since the channel knob consists of three components, a knob ③, a 16CH display seal ④ and a spacer ⑤, replace and reinstall these three parts at the same time.

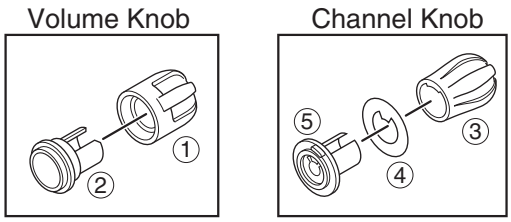

CIRCUIT DESCRIPTION

1. Overview

This transceiver is a VHF/FM/APCO portable transceiver designed to operate in the frequency range of 136 to 174MHz.

The unit consists of receiver, transmitter, phase-locked loop (PLL) frequency synthesizer, base band parts, power supply, and control circuits.

2. Frequency Configuration

The receiver is a double-conversion superheterodyne using first intermediate frequency (IF) of 49.95MHz and second IF of 450kHz. Incoming signals from the antenna are mixed with the local signal from the PLL circuit to produce the first IF of 49.95MHz.

This is then mixed with the 50.4MHz second local oscillator output to produce the 450kHz second IF. This signal is detected to give the demodulated signal in the DSP.

The transmit signal frequency is generated by the PLL VCO, and modulated by the signal from the DSP. It is then amplified and fed to the antenna.

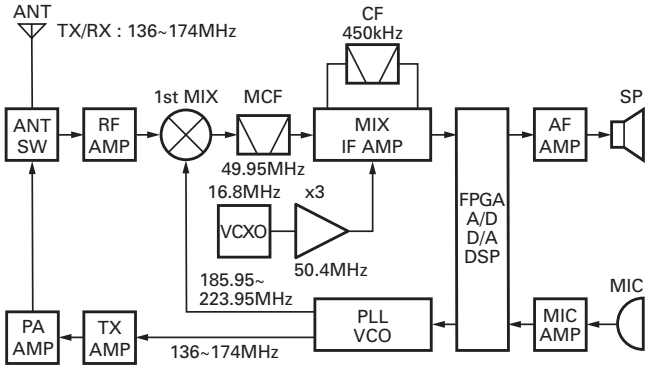

Fig. 1 Frequency configuration

3. Receiver System

3-1. Front-end RF Amplifier

The signal is passed through an antenna matching coil, where the high-frequency components are amplified by a GaAs FET(Q202). The signals are then fed into band-pass filter that uses varactor diode tuning to reject unwanted signal components, and is fed to the 1st mixer.

3-2. 1st Mixer

The 1st mixer uses the GaAs IC (IC202). The 1st mixer mixes the signal with the 1st local oscillator frequency from the VCO, and converts it to the 1st IF (49.95MHz).

The signal then passes through monolithic crystal filter (XF201) to remove unnecessary nearby frequency components. The signal from the MCF is used as the 1st IF signal.

3-3. IF Amplifier

The 1st IF signal is amplified by the IF amplifier (Q204) and fed into the FM IC (IC204). The IF signal is then mixed with the 2nd local oscillator frequency of 50.4MHz to generate the 2nd IF of 450KHz. The 450KHz signal is then passed through a ceramic filter (CF201) and fed back into IC204 for additional amplification.

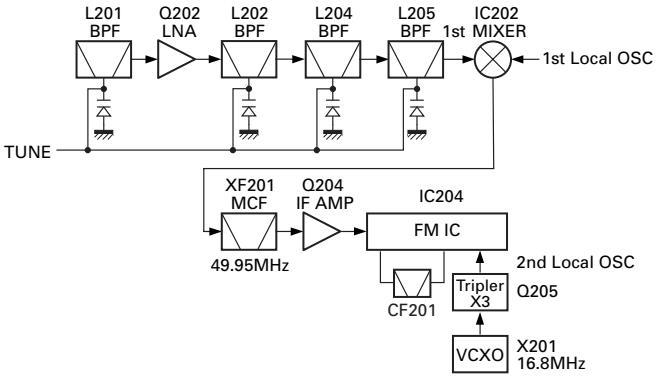

Fig. 2 Receiver section

3-4. Wide/ Narrow/ APCO Switching Circuit

Narrow and Wide and APCO settings can be made for each channel by switching the ceramic filters CF203 (Wide), CF204 (Narrow), CF202 (APCO).

The Wide and Narrow and APCO data is output from pin54 (WN) and pin55 (VN) of CPU (IC5).

When a Wide data (VN : low level, WN : high level) is received, the 450KHz signal is passed through a ceramic filter (CF203). When a Narrow data (VN : low level, WN : low level) is received, the 450KHz signal is passed through a ceramic filter (CF204). When a APCO data (VN : high level, WN : high level) is received, the 450KHz signal is passed through a ceramic filter (CF202).

If the 450kHz signal is a FM signal(Wide, Narrow), the signal is detected by a ceramic discriminator (CD201). AF signal is fed to CODEC(IC406), the AF level is adjusted and it is output from 15pin of IC406. Q209 turns on/off with the Wide/Narrow data and the IC204 detector output level is changed to maintain a constant output level during Wide or Narrow signals.

If the 450kHz signal is an APCO signal, the signal is prepared by the buffer amplifier (IC208) and fed to FPGA (IC13). The APCO signal is A/D-converted by the FPGA and DSP (IC8), and is performed APCO demodulation.

The AF signal is output from 15pin of CODEC (IC406).

VN	WN	Filter
H	H	APCO
L	H	Wide
L	L	Narrow

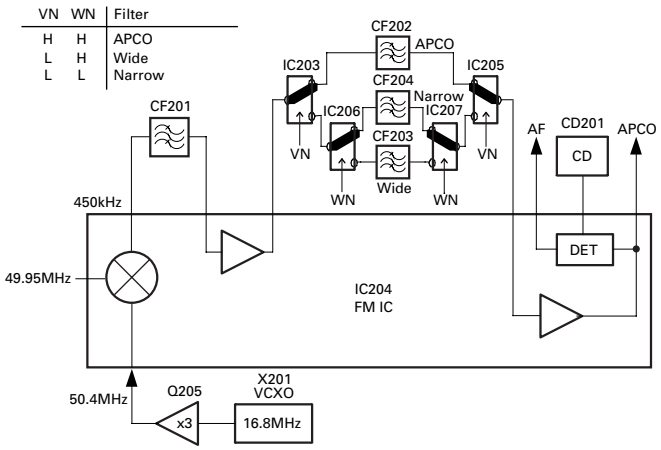

Fig. 3 Wide/Narrow/APCO switching circuit

CIRCUIT DESCRIPTION

3-5. Audio Amplifier Circuit

- **AF signal**

The AF signal from CODEC (IC406) is amplified by IC407 and goes through IC408.

The AF signal goes through a DAC (IC411), an AF amplifier (IC603), and an AF switch (IC604), and is routed to audio power amplifier (IC601), where the signal is amplified and output to the internal speaker.

- **Audio circuit**

CODEC (IC406) extracts the audio signal from the receive signal in the detection circuit in FM mode. The signal is then deemphasized and output as a decoded audio signal in APCO mode.

LPF (IC407) removes quantization noise from the audio signal output of the CODEC.

The switch (IC408) stops the audio signal of the CODEC to prevent the mixing of BEEP, voice announcement and audio signal when the BEEP or voice announcement is output from the CPU. If an optional scrambler board is installed, the audio path is adjusted so that the audio signal goes through the scrambler board.

DAC (IC411) controls the voltage amplitude level of the audio signal according to the volume position of the transceiver. This determines the volume level output from the speaker.

The amplifier (IC603) amplifies the audio signal so that the audio signal level at the final stage amplifier is appropriate.

The volume levels of the 8Ω internal speaker and 16Ω external speaker are matched using the EXT AFC.

The switch (IC604) adjusts the signal path so that the audio signal is output to the audio amplifier (IC602) for external speakers when optional external speakers are connected. If no external speakers are connected, the audio signal is output to the audio amplifier (IC601) for the internal speaker.

IC601 and IC602 output is BTL (Bridge Tied Load).

- **AF control**

Speaker switching is performed by the CPU (IC5) using INT AFC or EXT AFC. First, the logic level at the speakers switching terminal (SSW) on the universal connector is fed to the CPU. The CPU then outputs data based on this input.

When there is no SP-MIC installed, this logic level becomes high. When the INT AFC is high, the EXT AFC goes low, so the AF signal is only fed to the amplifier for the internal speaker (INT SP) of IC601.

However, when a SP-MIC has been connected, this logic level becomes low, so the INT AFC goes low and the EXT AFC goes high. In this case, the AF signal is fed only to amplifier for the external speaker (EXT SP) of IC602.

3-6. Squelch Circuit

It amplifies the demodulated noise signal from FM IC (IC204) after filtering through BPF circuit. Then, the amplified signal is converted to DC signal by the detection circuit. The converted signal is fed to the CPU (IC5).

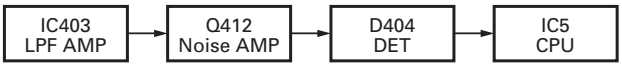

Fig. 5 Squelch circuit

4. Transmitter System

4-1. Audio Band Circuit

The audio band circuit of the transmitter system consists of the following:

- Microphone (Main)
- Microphone (Sub)
- N/C amplifier (Noise canceling mic amplifier) (IC603)
- Switch (Int/ext) (Q410)
- Switch (Mic mute) (Q406)
- AGC (IC405, D402, D403)
- Switch (Scrambler board) (Q407)

This transceiver has two types of microphones: main and sub. The main microphone is located at the front of the cabinet and the sub microphone is located at the rear of the cabinet. The audio signal input from these microphones is synthesized by the N/C amplifier (IC603). The audio signal from the main microphone is synthesized in normal phase and the audio signal from the sub microphone is synthesized in opposite phase. So if the same audio signal is applied in the same phase to the main and sub microphones, it is cancelled by the N/C amplifier. If audio signal is input to only the main or sub microphone, it is not cancelled, but output from the N/C amplifier.

This prevents ambient noise from entering the audio band circuit at the next or subsequent stages.

When an optional external speaker microphone is installed, the Int/ext switch (Q410) cuts off the audio signal from the main and sub microphones and sends only the audio signal from the external microphone to the next stage.

The microphone mute switch (Q406) cuts off audio signals from the main, sub and external microphones.

AGC (IC405, D402, D403) is an amplifier that reduces gain automatically by greatly increasing the attenuation when the audio signal of a certain level or higher is present. It controls the gain so that the audio signal input to the CODEC (IC406) is not clipped.

If an optional scrambler board is installed, the switch

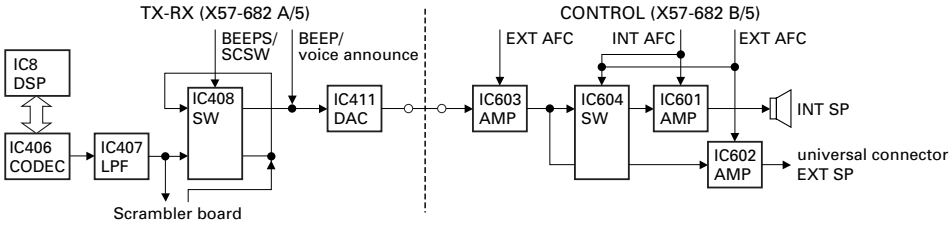

Fig. 4 Audio circuit diagram

CIRCUIT DESCRIPTION

(Q407) adjusts the signal path so that the audio signal is input to the CODEC through the scrambler board.

The audio signal is input to the CODEC (base band circuit) through the above path.

4-2. Base Band Circuit

The base band circuit of the transmitter system consists of the following:

- CODEC (IC406)
- DSP (IC411)
- LPF (IC407)
- Buffer (IC409)
- DAC (IC411)
- Amplifier (IC412)

The audio signal output from the base band circuit is converted to digital data of a sampling frequency of 48 kHz and a quantization resolution of 16 bits by the CODEC (IC406). This digital data is sent to the DSP (IC8), and voice signals of 300 Hz or lower and frequencies of 3 kHz or higher are cut off and an audio range 300 Hz to 3 kHz is extracted.

The audio signal is then pre-emphasized in FM mode and synthesized with the signals, such as QT and DQT, as required, and is then output from the CODEC. In APCO mode, the audio signal is converted to the C4FM base band signal and output from the CODEC. The DTMF and MSK base band signals are also generated by the DSP and output by the CODEC.

LPF (IC407) removes quantization noise from the base band signal output from the CODEC.

The buffer (IC409) sets the base band signal level to the DAC input range.

The DAC (IC411) assigns the base band signal to the VCO (Q311) and VCXO (X301).

At this time, the level output according to the transmit carrier is fine-adjusted according to the modulation method of FM Wide, FM Narrow and APCO.

4-3. Transmit Signal Amplification Circuit (From T/R switch to Final amplifier)

The transmit signal passing through the T/R switch (D101) is amplified to approx. 50 mW by the two transistor amplification circuits (Q101, Q102). The transmit signal output from Q102 passes through a 3dB attenuator to improve high-frequency signal matching is amplified by the drive amplifier (Q103) and applied to the final amplifier (Q105). The signal applied to the final amplifier is amplified by the final amplifier so that the antenna output is 5 W (1 W for Low Power).

4-4. High-Frequency Signal Switch Circuit (From Antenna switch to ANT output)

The transmit signal output from the final amplifier (Q105) passes through the antenna switch (D106, D107) and LPF, and goes into the SPDT switch (IC102, IC103) which changes the antenna connector (CN101) and the universal connector (CN102).

The transmit signal passing through the output change switch passes through the surge protection HPF and spurious removing LPF and then goes to the antenna connector (CN101) or the universal connector (CN102), specified by the SPDT switch (IC102, IC103).

4-5. APC Circuit

The APC circuit detects the current of the drive amplifier (Q103) and final amplifier (Q105) during transmission and controls the output power by controlling the current.

It detects the current using R119 and R120 and applies a drop voltage between both resistors during transmission to APC (IC101). It controls the transmission current of the drive amplifier and final amplifier so that it is constant by comparing this current with the reference voltage output from pin 7 of IC104. The reference voltage input to pin 5 of IC104 is output from the DAC (IC411). High/Low power output is set according to the DAC output voltage.

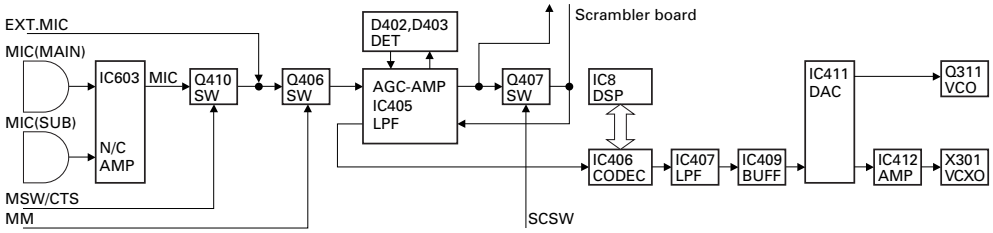

Fig. 6 Audio band and Base band circuit

4-6. Temperature Protection Circuit

The temperature protection circuit reduces the APC voltage when the temperature of Q105 rises, to prevent thermal destruction of the final amplifier (Q105). The CPU (IC5) detects the temperature with a thermistor (TH101) to control the reference voltage to the APC circuit.

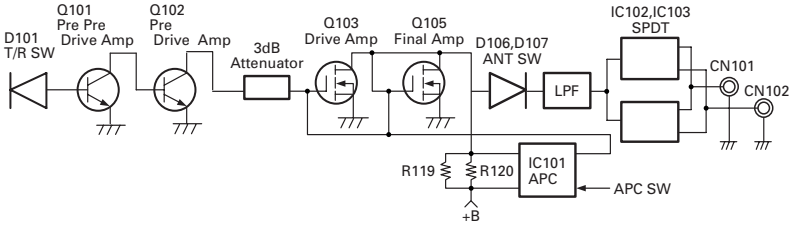

Fig. 7 Transmitter circuit

CIRCUIT DESCRIPTION

5. PLL Frequency Synthesizer

The PLL Frequency Synthesizer consists of the following components:

- VCXO (X301)
- VCO (Q310, Q311)
- Rheostat (IC414)
- PLL IC (IC303)
- 1/2 divider (IC304)
- Local switch (D101, D210)

5-1. VCXO (X301)

VCXO (X301) generates a reference frequency of 16.8 MHz for the PLL frequency synthesizer. This reference frequency is applied to pin 8 of the PLL IC (IC303).

The VCXO oscillation frequency is fine-adjusted by controlling the voltage applied to pin 1 of the VCXO with DAC (IC411). It is also controlled with pin 1 of the VCXO if the output from VCXO is modulated.

5-2. VCO

There is a RX VCO and a TX VCO.

The TX VCO (Q311) generates a transmit carrier and the RX VCO (Q310) generates a 1st local receive signal.

For the VCO oscillation frequency, the transmit carrier is 272 to 348 MHz and the 1st local receive signal is 371.9 to 447.9 MHz.

The VCO oscillation frequency is determined by one system of operation switching terminal "T/R" and two systems of voltage control terminals "C/V" and "V-assist".

The operation switching terminal, "T/R", is controlled by the control line (T/R) output from the CPU (IC5). When the T/R logic is low, the VCO outputs the transmit carrier and when it is high, it outputs a 1st local receive signal.

The voltage control terminals, "CV" and "V-assist", are controlled by the PLL IC (IC303) and rheostat (IC414) and the output frequency changes continuously according to the applied voltage. For the modulation input terminal, "MOD", the output frequency changes according to the applied voltage. This is used to modulate the VCO output. "MOD" works only when "T/R" is low.

5-3. Rheostat (IC414)

The rheostat (IC414) is connected to the VCO voltage control terminal, "V-assist", and quickly controls the VCO oscillation frequency. However, its accuracy is low and the VCO frequency cannot be matched accurately with the desired transmit carrier or the 1st local receive signal.

The rheostat is controlled by the CPU (IC5) through the 3-line "PCS", "DAT", "CLK" serial bus.

5-4. PLL IC (IC303)

PLL IC compares the differences in phases of the VCO oscillation frequency and the VCXO reference frequency, returns the difference to the VCO CV terminal and realizes the "Phase Locked Loop" for the return control. This allows the VCO oscillation frequency to accurately match (lock) the desired frequency.

When the frequency is controlled by the PLL, the frequency convergence time increases as the frequency difference increases when the set frequency is changed. To supplement this, the rheostat is used before control by the PLL IC to bring the VCO oscillation frequency close to the desired frequency. As a result, the VCO CV voltage does not change and is always stable at approx. 2 V.

The desired frequency is set for the PLL IC by the CPU (IC5) through the 3-line "LE", "DAT", "CLK" serial bus. Whether the PLL IC is locked or not is monitored by the CPU through the "UL" signal line. If the VCO is not the desired frequency (unlock), the "UL" logic is low.

5-5. 1/2 divider (IC304)

The 1/2 divider (IC304) inputs the transmit carrier and the 1st local receive signal output from the VCO and divides each frequency by 1/2. The frequency divided by 1/2 becomes a carrier that is actually sent and a 1st local receive signal that is actually input to a mixer. (Both the VCO and the PLL IC operate with double frequencies in phase locked loops.)

5-6. Local Switch (D101, D210)

The connection destination of the signal output from the 1/2 divider (IC304) is changed with the diode switch (D101) that is controlled by the transmission power supply, 5T, and the diode switch (D210) that is controlled by the receive power supply, 5R.

If the 5T logic is high, it is connected to a send-side pre-pre-drive (Q101). If the 5T logic is low, it is connected to a receive-side mixer (IC202).

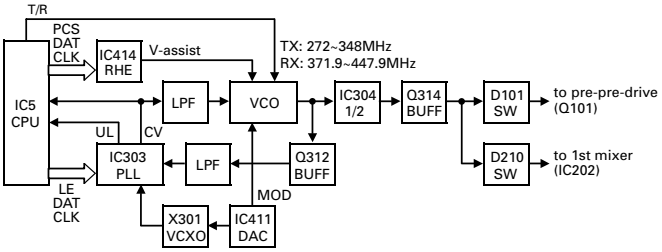

Fig. 8 PLL block diagram

6. Control Circuit

The control circuit consists of CPU (IC5) and its peripheral circuits. It controls the TX-RX unit and transfers data to the Control unit. IC5 mainly performs the following;

1) Switching between transmission and reception by PTT signal input.
2) Reading system, zone, frequency, and program data from the memory circuit.
3) Sending frequency program data to the PLL.
4) Controlling squelch on/off by the DC voltage from the squelch circuit.
5) Controlling the audio mute circuit by decode data input.
6) Transmitting tone and encode data.

6-1. Memory Circuit

Memory circuit consists of the CPU (IC5) and a flash memory (IC6). A flash memory has a capacity of 16M bits and

CIRCUIT DESCRIPTION

contains the transceiver control program for the CPU. It also stores the data for transceiver channels and operating parameter that are written by the FPU. This program can be easily written from an external devices.

The EEPROM (IC2) stores the last channel data, the scan on status, and other parameters.

■ Flash memory

Note : The flash memory stores the data that is written by the FPU (KPG-95D), and firmware program (User mode, Test mode, Tuning mode, etc.). This data must be rewritten when replacing the flash memory.

■ EEPROM

Note : The EEPROM stores tuning data (Deviation, Squelch, etc.).
Realign the transceiver after replacing the EEPROM.

■ Real-time clock

The clock function is based on real-time clock IC (IC1). When the power supply is off, it is backed up by an internal secondary lithium battery

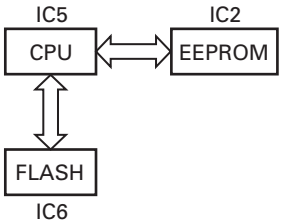

Fig. 9 Memory circuit

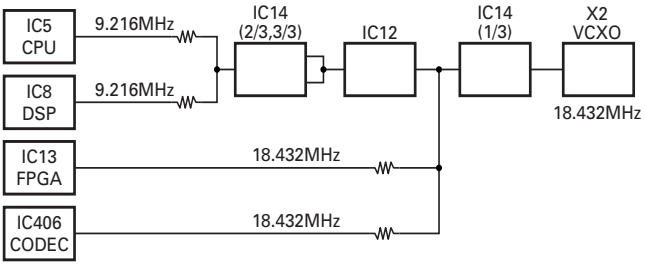

Fig. 10 Clock diagram

6-2. LCD (K2 and K3 models only)

The LCD is controlled using the bus lines on the connector (CN604) of the control unit (X57 B/5).

It corrects the LCD contrast voltage using IC704. The voltage corresponding to the temperature is sent to pin 3 of IC704 from the CPU (IC5) according to the temperature measurement results using a temperature IC (IC4).

6-3. Temperature Detection Circuit

The temperature detection circuit detects the temperature using a temperature IC (IC4) and corrects the thermal characteristic change of the squelch or LCD.

6-4. Key Detection Circuit

Keys are detected using three shift registers (IC701, IC702, IC703).

The KIN signal that is normally pulled down goes high when any key is pressed.

6-5. Low Battery Warning

The battery voltage is divided using R15 and R16 and is detected by the CPU (IC5). When the battery voltage falls below the voltage set by the Low battery warning adjustment, the red LED blinks to notify the operator that it is time to replace the battery. If the battery voltage falls even more (approx. 5.8V), a beep sounds and transmission stops.

Low battery warning	Battery condition
The red LED blinks during transmission.	The battery voltage is low but the transceiver is still usable.
The red LED blinks and the warning tone beeps while the PTT switch is pressed.	The battery voltage is low and the transceiver is not usable to make calls.

6-6. VOX

The VOX function can be used only with an external microphone.

The VOX (Voice Operated Transmission) function detects voice input to the microphone and automatically switches between transmission and reception. However, if a scrambler board is installed (Extended Function Voice Scrambler is selected with FPU), VOX does not operate.

If the microphone input exceeds a certain level, transmission automatically begins. If the input falls below a certain level, the transceiver automatically returns to receive mode.

The TK-5210 realizes this function using DSP (IC8).

6-7. DSP

The DSP circuit consists of a DSP (IC8), a CODEC (IC406) and processes the base band signal. The DSP operates on an external clock of 9.216MHz (the same as the CPU), the I/O section operates at 3.3V and the core section operates at 1.5V. The DSP carries out the following processes:

- C4FM encoding
- Analog FM pre-emphasis/de-emphasis
- Vocoder (IMBE) processing between audio codec and modulation/demodulation
- CAI processing, such as error correction encoding
- QT/DQT encoding/decoding
- DTMF encoding/decoding
- MSK encoding/decoding
- 2-tone decoding
- Compressor/expander processing
- Transmit/receive audio filtering processing
- VOX processing
- Microphone amplifier AGC processing
- Audio mute processing
- Modulation level processing

CIRCUIT DESCRIPTION

6-8. FPGA

The FPGA(IC13) I/O section operates at 3.3V. and the core section operates at 2.5V. The FPGA has the following function.

- Demodulation (C4FM,CQPSK)
- Shift register(8CH)
- Level convert Buffer amplifier(5V→3.3V)(9CH)
- Generates 1.536MHz for the demodulation and CODEC.

7. Power Supply Circuit

The battery voltage (+B) is provided from the battery terminal on the TX-RX unit (X57 A/5).

The battery voltage passes through a 3A fuse (F401) and goes to the VDD terminal of the DC/DC converter (IC805).

The +B voltage is detected by the voltage detection IC (IC804). If the voltage is 5.6 V or higher, the IC805 CE pin becomes high and the DC/DC converter begins.

The IC805 output voltage (3.6V) becomes a power supply for five regulators (IC801, IC802, IC803, IC806, IC807).

The output from IC805 controls the CE pin of IC801, IC802, IC803, IC806, IC807 by turning the VOL SW ON/OFF.

The CPU, DSP and FPGA start with the above five regulators. After the CPU starts, two regulators (IC401, IC402) begin operating with the PWR and 5CC signals output from the CPU.

When the Power SW (Q415) is turned ON by the PWR signal, the 15V DC/DC converter (IC808) is activated. IC807, IC402, IC401 VDD is provided by +B.

The output from IC401 is switched to 5R that is turned ON in receive mode and 5T that is turned ON in transmit mode via CPU control. Output from IC807 includes two voltages: 5M that is always 5 V and 5MCS that is turned ON when an option is installed on the universal connector.

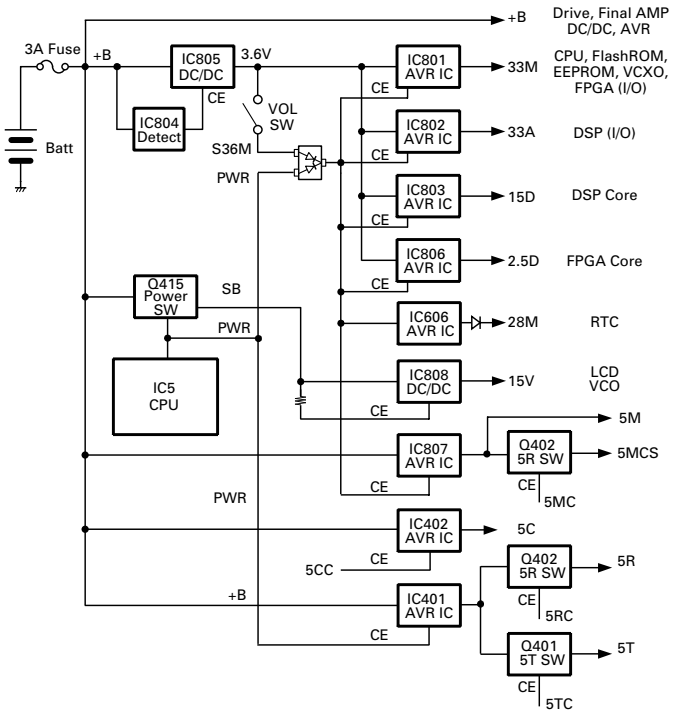

Fig. 11

8. Signaling Circuit

8-1. Encode (QT/DQT/DTMF/MSK)

Each signaling data signal of QT, DQT, DTMF and MSK is generated by the DSP circuit, superposed on a modulation signal and output from pin 16 of the CODEC (IC406).

The modulation balance of the QT/DQT signal is adjusted by the D/A converter(IC411) and the resulting signal is routed to the modulation input of the VCO and VCXO (X301).

The each deviation of the TX QT, DQT, DTMF and MSK tone is adjusted by changing the output level of the CODEC and the resulting signal is routed to VCO and VCXO. The RX DTMF tone is output from pin 15 of the CODEC, passes through the receive audio signal system, and is output from the speaker.

8-2. Decode (QT/DQT/DTMF/2-tone/MSK)

The audio signal is removed from the FM detection signal sent to the DSP circuit and the resulting signal is decoded.

9. Compander Circuit

The term "compander" means compressor and expander. The compander reduces noise by utilizing a compressor and an expander.

The TK-5210 contains DSP(IC8) to perform this operation. The TK-5210 compander can be turned on or off using the FPU.

TERMINAL FUNCTION

TX-RX unit (X57-6820-XX A/5)

Pin No.	Name	I/O	Function
CN7			
1	DSR	I	Data set ready
2	E	-	GND
3	RXD	I	Serial data input
4	TXD	O	Serial data Output
5	5M	-	5V
6	RTS1	O	Request to Send
7	REM	I	Programmable function key input
8	PTT	I	External PTT input
9	MICE	-	External MIC GND
10	EMC	I	External MIC input
11	MSW/CTS	I	EXT/INT MIC switch input
12	SP-	O	BTL output - for external speaker
13	SP+	O	BTL output + for external speaker
14	SSW	I	EXT/INT speaker switch input
CN14			
1	OPT1	O	Scramble code output 1 (Scrambler board)
		O	Channel busy (ANI board)
		I	Busy (VGS-1)
2	OPT3	O	Scramble code output 2 (Scrambler board)
		I	Key (ANI board)
		I	Play (VGS-1)
3	RXD1	I	Serial data intput(VGS-1)
4	TXD1	O	PTT (Scrambler board)
		O	Serial data output (VGS-1)
5	NC	-	No connection
6	OPT4	I/O	Echo PTT (Scrambler board)
		O	PTT (ANI board)
		O	Enable (VGS-1)
7	USEL	-	GND
8	OPT5	O	Scramble code output 4 (Scrambler board)
		O	Emergency (ANI board)
		O	Reset output(VGS-1)
9	DGND	-	GND
10	AGND	-	GND
11	AI	I	VGS Audio Input (VGS-1)
12	AO	O	VGS Audio Output (VGS-1)
13	AGND	-	GND
14	5A	-	5V
15	STON	I	Side tone input(ANI board)
16	DI/ANI	I	Data input (ANI board)
17	TCONT	I	Speaker mute signal (ANI board)
18	MAN DOWN	O	Man-down output (ANI board)
19	INH	I	MIC mute signal input (ANI board)
20	OPT2	O	Scrambler control signal output (Scrambler board)
		I	Emergency signal input (ANI board)
21	TXO	O	MIC signal output (Scrambler board)
22	RXEO	O	Audio signal output (Scrambler board)
23	RXEI	I	Audio signal input (Scrambler board)
24	TXI	I	MIC signal input (Scrambler board)
25	OPT6	O	Scramble code output 3 (Scrambler board)
26	SB2	O	Switched B output
CN19 (K2 and K3 models only)			
1	LCS	O	LCD chip select
2	GND	-	GND
3	D0	I/O	Data bus 0
4	D1	I/O	Data bus 1
5	D2	I/O	Data bus 2
6	D3	I/O	Data bus 3
7	D4	I/O	Data bus 4
8	D5	I/O	Data bus 5
9	D6	I/O	Data bus 6
10	D7	I/O	Data bus 7
11	RD	-	No connection
12	WR	O	WR bus
13	GND	-	GND
14	A0	O	Address bus 0
CN408			
1	GND	-	GND
2	GND	-	GND
3	MIC	I	External MIC input
4	MICE	-	External MIC GND
5	SP+	I	BTL output + for external speaker
6	PWR	O	Power control output
7	SP+	I	BTL output + for external speaker
8	15V	-	15V
9	SP-	I	BTL output - for external speaker
10	SB1	I	Battery level input
11	SP-	I	BTL output - for external speaker
12	+B	-	Power input after passing through the fuse
13	AF	O	Audio Output
14	+B	-	Power input after passing through the fuse
15	VOL	I	Volume level input
16	+B	-	Power input after passing through the fuse
17	CLK	O	Clock data output
18	+B	-	Power input after passing through the fuse
19	GND	-	GND
20	LRST	O	LCD reset output
21	KIN	I	Key input
22	28M	-	2.8V
23	EXAFC	O	External AF output
24	PSW	I	Power input after power switch
25	KES	O	Key counter clear to send
26	INAFC	O	Internal AF output
27	DAT	O	Data output
28	ECSW	O	Echo cancel MIC switch
29	TGL0	I	Lever switch input 0
30	33M	-	3.3V
31	TGL2	I	Concentric switch input 2
32	33M	-	3.3V
33	TGL1	I	Concentric switch input 1
34	33A	-	3.3V
35	CH_A	I	Rotary switch input 1
36	33A	-	3.3V

TERMINAL FUNCTION

Pin No.	Name	I/O	Function
37	CH_B	I	Rotary switch input 2
38	25D	-	2.5V
39	CH_C	I	Rotary switch input 3
40	15D	-	1.5V
41	CH_D	I	Rotary switch input 4
42	15D	-	1.5V
43	PTT	I	PTT input
44	5M	-	5V
45	NC	-	No connection
46	5M	-	5V
47	oE	O	Shift register OE
48	LCDV	-	LCD contrast control voltage
49	DGND	-	GND
50	DGND	-	GND

Control unit (X57-6820-XX B/5)

Pin No.	Name	I/O	Function
CN601			
1	GND	-	GND
2	GND	-	GND
3	MIC	O	External MIC output
4	MICE	-	External MIC GND
5	SP+	O	BTL output + for external speaker
6	PWR	I	Power control input
7	SP+	O	BTL output + for external speaker
8	15V	-	15V
9	SP-	O	BTL output - for external speaker
10	SB1	O	Battery Level output
11	SP-	O	BTL output - for external speaker
12	+B	-	Power input after passing through the fuse
13	AF	I	Audio input
14	+B	-	Power input after passing through the fuse
15	VOL	O	Volume level output
16	+B	-	Power input after passing through the fuse
17	CLK	I	Clock data input
18	+B	-	Power input after passing through the fuse
19	GND	-	GND
20	LRST	I	LCD reset input
21	KIN	O	Key output
22	28M	-	2.8V
23	EXAFC	I	External AF input
24	PSW	O	Power output after power switch
25	KES	I	Key counter clear to send
26	INAFC	I	Internal AF input
27	DAT	I	Data input
28	ECSW	I	Echo cancel MIC switch
29	TGL0	O	Lever switch output 0
30	33M	-	3.3V
31	TGL2	O	Concentric switch output 2
32	33M	-	3.3V
33	TGL1	O	Concentric switch output 1
34	33A	-	3.3V

Pin No.	Name	I/O	Function
35	CH_A	O	Rotary switch output 1
36	33A	-	3.3V
37	CH_B	O	Rotary switch output 2
38	25D	-	2.5V
39	CH_C	O	Rotary switch output 3
40	15D	-	1.5V
41	CH_D	O	Rotary switch output 4
42	15D	-	1.5V
43	PTT	O	PTT output
44	5M	-	5V
45	NC	-	No connection
46	5M	-	5V
47	oE	I	Shift register OE
48	LCDV	-	LCD contrast control voltage
49	DGND	-	GND
50	DGND	-	GND
CN603			
1	INT SP-	O	BTL output - for internal speaker
2	INT SP-	O	BTL output - for internal speaker
3	INT SP+	O	BTL output + for internal speaker
4	INT SP+	O	BTL output + for internal speaker
5	INT MIC+	I	Internal MIC input
6	INT MIC-	-	Internal MIC GND
CN604 (K2 and K3 models only)			
1	A0	I	Adrress bus 0
2	GND	-	GND
3	WR	I	WR bus
4	RD	-	No connection
5	D7	I/O	Data bus 7
6	D6	I/O	Data bus 6
7	D5	I/O	Data bus 5
8	D4	I/O	Data bus 4
9	D3	I/O	Data bus 3
10	D2	I/O	Data bus 2
11	D1	I/O	Data bus 1
12	D0	I/O	Data bus 0
13	GND	-	GND
14	LCS	I	LCD chip select
CN751 (K2 and K3 models only)			
1	V4	-	LCD drive power supply
2	V3	-	LCD drive power supply
3	V2	-	LCD drive power supply
4	V1	-	LCD drive power supply
5	V0	-	LCD drive power supply
6	VR	-	V0 voltage adjustment terminal
7	NC	-	No connection
8	NC	-	No connection
9	NC	-	No connection
10	NC	-	No connection
11	NC	-	No connection
12	NC	-	No connection
13	Vout	-	Raising voltage output
14	VDD	-	3.3V

TERMINAL FUNCTION

Pin No.	Name	I/O	Function
15	NC	-	No connection
16	GND	-	GND
17	GND	-	GND
18	D7	I/O	Data bus 7
19	D6	I/O	Data bus 6
20	D5	I/O	Data bus 5
21	D4	I/O	Data bus 4
22	D3	I/O	Data bus 3
23	D2	I/O	Data bus 2
24	D1	I/O	Data bus 1
25	D0	I/O	Data bus 0
26	E/RD	I	RD bus
27	WR	O	WR bus
28	A0	O	Adrress bus 0
29	LRST	O	LCD reset output
30	LCS	O	LCD chip select
CN752			
1	NC	-	No connection
2	L_MIC	I	Noise canceler MIC
3	MICE	-	MIC GND
4	GND	-	GND
5	CH_A	I	Rotary switch input 1
6	CH_B	I	Rotary switch input 2
7	CH_C	I	Rotary switch input 3
8	CH_D	I	Rotary switch input 4
9	36M	-	3.6V
10	S36M	-	3.6V
11	33M	-	3.3V
12	TGL0	I	Lever switch input 0
13	TGL1	I	Concentric switch input 1
14	TGL2	I	Concentric switch input 2
15	BLED	-	Busy LED control
16	TXLED	-	TX LED control
17	ORG	O	Key scan signal output
18	VOL	I	Volume level input
19	L_KEY1	O	Key scan signal output
20	GND	-	GND
CN753			
1	PF2	O	Key output (Side2 Key)
2	PF3	O	Key output (Side3 Key)
3	L_KEY1	I	Key input
4	L_PTTG	I	PTT GND
5	L_PTT	I	PTT input
6	PF1	O	Key output (Side1 Key)

Option board unit (X57-6820-XX D/5)

Pin No.	Name	I/O	Function
CN901			
1	OPT1	I	Scramble code input 1 (Scrambler board)
		I	Channel busy (ANI board)
		O	Busy (VGS-1)
2	OPT3	I	Scramble code input 2 (Scrambler board)
		O	Key (ANI board)
		O	Play (VGS-1)
3	RXD1	O	Serial Data output(VGS-1)
4	TXD1	I	PTT (Scrambler board)
		I	Serial Data input (VGS-1)
5	NC	-	No connection
6	OPT4	I/O	Echo PTT (Scrambler board)
		I	PTT (ANI board)
		I	Enable (VGS-1)
7	NC	-	No connection
8	OPT5	I	Scramble code input 4 (Scrambler board)
		I	Emergency (ANI board)
		I	Reset input(VGS-1)
9	DGND	-	DGND
10	AGND	-	GND
11	NC	-	No connection
12	NC	-	No connection
13	AGND	-	GND
14	5A	-	5V
15	STON	O	Side tone output(ANI board)
16	DI/ANI	O	Data output (ANI board)
17	TCONT	O	Speaker mute signal (ANI board)
18	MAN DOWN	I	Man-down input (ANI board)
19	INH	O	MIC mute signal output (ANI board)
20	OPT2	I	Scrambler control signal input (Scrambler board)
		O	Emergency signal output (ANI board)
21	TXO	I	MIC signal input (Scrambler board)
22	RXEO	I	Audio signal input (Scrambler board)
23	RXEI	O	Audio signal output (Scrambler board)
24	TXI	O	MIC signal output (Scrambler board)
25	C3	I	Scramble code input 3 (Scrambler board)
26	SB2	I	Switched B input

Top panel unit (X57-6820-XX C/5)

Pin No.	Name	I/O	Function
CN902			
1	36M	-	3.6V
2	S36M	-	3.6V
3	GND	-	GND
4	VOL	I	Volume level input
5	33M	-	3.3V
6	CH_A	I	Rotary switch input 1
7	TGL2	I	Concentric switch input 2
8	TGL1	I	Concentric switch input 1
9	C	-	GND
10	CH_B	I	Rotary switch input 2
11	CH_D	I	Rotary switch input 4
12	CH_C	I	Rotary switch input 3
CN903			
1	GND	-	GND
2	CH_A	O	Rotary switch output 1

TERMINAL FUNCTION

Pin No.	Name	I/O	Function
3	CH_B	O	Rotary switch output 2
4	CH_C	O	Rotary switch output 3
5	CH_D	O	Rotary switch output 4
6	36M	-	3.6V
7	S36M	-	3.6V
8	33M	-	3.3V
9	TGL0	O	Lever switch output 0
10	TGL1	O	Concentric switch output 1
11	TGL2	O	Concentric switch output 2
12	BLED	-	Busy LED control
13	TXLED	-	TX LED control
14	ORG	I	Key scan signal input
15	VOL	O	Volume Level output
16	KIN	I	Key scan signal input
17	GND	-	GND

Universal connector

Pin No.	Name	I/O	Function
1	SSW	I	EXT/INT speaker switch input
2	SP+	O	BTL output + for external speaker
3	SP–	O	BTL output – for external speaker
4	MSW	I	EXT/INT MIC switch input
5	EMC	I	External MIC input
6	ME	-	External MIC GND
7	PTT	I	External PTT input
8	PF	I	Programmable function key input
9	OPT	-	No connection
10	E	-	GND
11	5M	-	5V
12	TXD	O	Serial data output
13	RXD	I	Serial data input
14	NC(E)	-	Not used (GND)

SEMICONDUCTOR DATA

CPU:30625MGP193GP (TX-RX unit: IC5)

Pin No.	Port Name	I/O	Function
1	VREF	-	A/D converter reference voltage input terminal
2	AVCC	-	A/D converter power supply input terminal
3	T/R	O	TX/RX switch (L:TX, H:RX)
4	BATT DET	I(A/D)	Battery detection terminal
5	NC(ANEX0)	I	NC (For expansion A/D)
6	LCDV	O(D/A)	LCD contrast adjustment
7	VOICE	O(D/A)	Voice output
8	SOE	O	Shift register OE
9	UL	I	PLL unlock input
10	DAT	O	Common data
11	CLK	O	Common clock
12	SDA	I/O	EEPROM data
13	BYTE	I	Use as 8bit data bus (Vcc)
14	CNVSS	I	Use as memory expansion mode (Vss)
15	PCS	O	Potentiometer CS
16	NC	-	No connection
17	RESET	I	Reset input
18	XOUT	-	No connection
19	VSS1	-	Power supply input
20	XIN	-	Clock input, 9.216MHz(18.432MHz/2)
21	VCC1	-	Power supply input
22	NMI	I	NC
23	RTCDT	I/O	RTC data I/O
24	PSW	I(INT1)	Power switch detection (L:Power on, H:Power off)
25	INTRA	I(INT0)	RTC interrupt input
26	LD	O	DAC LD
27	BEEP	O(PWM)	Beep output
28	LE	O	PLL CS
29	BSFT	O	Beat shift output (L:Shift, H:Not shift)
30	KEY/PLAY	I	TX key input (for ANI board), Play Input (for VGS)
31	STRB	O	Shift register CS
32	INH	I	Audio inhibit input (for ANI board),
33	AUXI	I	AUX input (for ANI board),
34	TCNT	I	Tone control input (for ANI board),
35	BEEPS	O	Beep switch(L:Unmute, H:Mute)
36	TXD1	O(UART)	UART(for VGS)
37	VCC1	-	Power supply input
38	RXD1	I (UART)	UART(for VGS)
39	VSS2	-	Power supply input
40	BUSY	I	BUSY input(for VGS)
41	RTSM/EXTO	O	UART(3.3V➔5V)/External option output port to universal connector
42	TXDM	O(UART)	UART(3.3V➔5V)
43	RXDM	I (UART)	UART(5V➔3.3V)
44	DSRM	I	UART(5V➔3.3V)
45	CTSM	I	UART(5V➔3.3V)
46	A20	O	Flash memory A19
47	KES	O	Key counter CS
48	KIN	I	Key counter return
49	MODEL	I	Model detection
50	RDY	I	Bus control (Ready)
51	ALE	-	No connection
52	HOLD	I	Bus control (Hold)
53	HLDA	-	No connection
54	WN	O	Wide/Narrow ceramic filter switching (L:Narrow, H:Wide)
55	VN	O	Wide,Narrow/APCO ceramic filter switching (L:APCO, H:Analog)
56	EXTIM	I	External option control port from universal connector
57	SCSW	O	When the scrambler board is installed, the route of AF is changed. (L:Scrambler on, H:off)
58	BCLK	O	Bus control (Base clock output)
59	RD	O	Bus control (Read)
60	BHE	-	No connection
61	WR	O	Bus control (Write)
62	TGL0	I	Lever switch input 0
63	TGL1	I	Concentric switch input 1
64	TGL2	I	Concentric switch input 2
65	CS3	O	LCD CS
66	CS2	O	Flash memory CS
67	CS1	O	DSP CS
68	CS0	O	Flash memory CS
69	A19	O	Address bus 19
70	A18	O	Address bus 18
71	A17	O	Address bus 17
72	A16	O	Address bus 16
73	A15	O	Address bus 15
74	A14	O	Address bus 14
75	A13	O	Address bus 13
76	A12	O	Address bus 12
77	A11	O	Address bus 11
78	A10	O	Address bus 10
79	A9	O	Address bus 9
80	INAFC	O	Internal AF control (L:Off, H:On)
81	CH_A	I	Rotary switch input 1
82	CH_B	I	Rotary switch input 2
83	CH_C	I	Rotary switch input 3
84	CH_D	I	Rotary switch input 4
85	VCC2	-	Power supply input
86	A8	O	Address bus 8
87	VSS3	-	Power supply input
88	A7	O	Address bus 7
89	A6	O	Address bus 6
90	A5	O	Address bus 5
91	A4	O	Address bus 4
92	A3	O	Address bus 3
93	A2	O	Address bus 2
94	A1	O	Address bus 1
95	A0	O	Address bus 0
96	EXAFC	O	External AF Control (L:Off, H:On)

SEMICONDUCTOR DATA

Pin No.	Port Name	I/O	Function
97	HINT	I(INT4)	DSP HINT interrupt
98	CAE3	I	Man-down switch input
99	PTT	I	PTT input
100	EXSP	I	External speaker install check
101	DRST	O	DSP reset output
102	FRST	O	Flash memory reset output
103	DSPINT	O	DSP interrupt output
104	D7	I/O	Data bus 7
105	D6	I/O	Data bus 6
106	D5	I/O	Data bus 5
107	D4	I/O	Data bus 4
108	D3	I/O	Data bus 3
109	D2	I/O	Data bus 2
110	D1	I/O	Data bus 1
111	D0	I/O	Data bus 0
112	5TC	O	5T control (L:Off, H:On)
113	5RC	O	5R control (L:Off, H:On)
114	5CC	O	5C control (L:Off, H:On)
115	APCSW	O	APC switch output (L:Off, H:On)
116	ANTSW	-	No connection
117	SELF	I	3.3V
118	MM	O	MIC mute output (L:Unmute, H:Mute)
119	PWR	O	Power control output (L:Power off, H:Normal)
120	WPA	I(A/D)	PA temperature compensation
121	SQ	I(A/D)	Analog SQ input
122	CV	I(A/D)	VCO CV input
123	RSSI	I(A/D)	RSSI input
124	TEMP	I(A/D)	Temperature input
125	BATT	I(A/D)	Battery level input
126	REM	I(A/D)	KMC-25 PF1/PF2 key, KVL3000 input
127	AVSS	-	A/D converter power supply input terminal
128	VOL	I(A/D)	Volume level input

Shift Register: BU4094BCFV (TX-RX unit: IC 11)

Pin No.	Port Name	I/O	Function
1	STRB	I	Latch clock input
2	DATA	I	Serial data input
3	CLK	I	Serial clock input
4	Q1	O	OPT5
5	Q2	O	OPT4
6	Q3	O	OPT1
7	Q4	O	OP_MAN
8	VSS	-	GND
9	QS	O	Serial data output
10	Q'S	O	NC
11	Q8	O	OPT6
12	Q7	O	OPT2
13	Q6	O	CHGIO:UNIV 9p I/O Switching
14	Q5	O	OPT3
15	OE	I	Output enable control input
16	VDD	-	Power supply input

Shift Register: BU4094BCF (Control unit IC701)

Pin No.	Port Name	I/O	Function
1	STRB	I	Latch clock input
2	DATA	I	Serial data input
3	CLK	I	Serial clock input
4-7	Q1-Q4	O	Key counter
8	VSS	-	GND
9	QS	O	Serial data output
10	Q'S	O	NC
11-14	Q8-Q5	O	Key counter
15	OE	I	Output enable control input
16	VDD	-	Power supply input

Shift Register: BU4094BCF (Control unit IC702)

Pin No.	Port Name	I/O	Function
1	STRB	I	Latch clock input
2	DATA	I	Serial data input
3	CLK	I	Serial clock input
4-7	Q1-Q4	O	Key counter
8	VSS	-	GND
9	QS	O	Serial data output
10	Q'4	O	NC
11-14	Q8-Q5	O	Key counter
15	OE	I	Output enable control input
16	VDD	-	Power supply input

Shift Register: BU4094BCF (Control unit IC703)

Pin No.	Port Name	I/O	Function
1	STRB	I	Latch clock input
2	DATA	I	Serial data input
3	CLK	I	Serial clock input
4-7	Q1-Q4	O	Key counter
8	VSS	-	GND
9	OS	O	NC
10	NC	O	NC
11	Q8	O	Audio amplifier switch
12	Q7	O	Backlight switch
13	Q6	O	TX LED switch
14	Q5	O	Busy LED switch
15	OE	I	Output enable control input
16	VDD	-	Power supply input

COMPONENTS DESCRIPTION

TX-RX unit (X57-6820-XX A/5)

Ref. No.	Part name	Description
IC1	IC	RTC IC
IC2	IC	EEPROM
IC3	IC	Voltage DET
IC4	IC	Temperature DET
IC5	IC	CPU
IC6	IC	Flash ROM
IC7	IC	3.3V→5V Buffer
IC8	IC	DSP
IC9	IC	Buffer
IC10	IC	Multiplexer
IC11	IC	Shift register
IC12	IC	D-type flip flop
IC13	IC	FPGA
IC14	IC	Buffer
IC101	IC	Auto power control
IC102,103	IC	SPDT
IC104	IC	DC AMP for APC
IC201	IC	DC AMP for BPF
IC202	IC	DBM
IC203	IC	Multiplexer
IC204	IC	FM IC
IC205~207	IC	Multiplexer
IC208	IC	Buffer
IC301	IC	DC AMP for VCO tune
IC303	IC	PLL IC
IC304	IC	1/2 Divider
IC401	IC	Voltage regulator (5T/5R)
IC402	IC	Voltage regulator (5C)
IC403	IC	OP AMP (5V reference/SQL AMP)
IC404	IC	Switch (VGS TX I/O)
IC405	IC	OP AMP (TX AGC AMP/Buffer AMP)
IC406	IC	CODEC
IC407	IC	OP AMP (TX LPF/ RX LPF)
IC408	IC	Switch (RX scrambler SW/BEEP SW)
IC409	IC	OP AMP (TX buffer AMP/RX buffer AMP)
IC411	IC	D/A converter
IC412	IC	OP AMP (TX MOD AMP/3.3V reference)
IC413	IC	Multiplexer
IC414	IC	Rheostat
IC415	IC	Bus switch (8ch)
IC416,417	IC	Bus switch (2ch)
IC501,502	IC	UART switch
Q1	FET	5V→3.3V level converter
Q101	Transistor	RF AMP
Q102	Transistor	RF AMP
Q103	FET	RF driver AMP
Q104	FET	APC switch
Q105	FET	RF final AMP
Q106	Transistor	APC switch
Q107	FET	APC switch
Q110	FET	SPDT EXT/INT switch
Q111	Transistor	3.3V→5V level converter

Ref. No.	Part name	Description
Q201	Transistor	Ripple filter
Q202	FET	RF AMP
Q204	FET	IF AMP
Q205	Transistor	2nd local buffer AMP
Q209	Transistor	W/N switch
Q306	FET	Buffer for CV
Q307	Transistor	Ripple filter
Q308	FET	T/R switch
Q309	FET	T/R switch
Q310,311	Transistor	VCO oscillation
Q312~314	Transistor	Buffer AMP
Q315	Transistor	Ripple filter
Q316	FET	Switch
Q401	FET	5T switch
Q402	FET	5R switch
Q403	FET	5M switch
Q404	Transistor	Auto gain control
Q405	Transistor	Auto gain control
Q406	FET	MIC mute
Q407,408	FET	TX scrambler switch
Q409,410	FET	EXT MIC switch
Q411	FET	VGS I/O switch
Q412	Transistor	Noise AMP
Q415,416	FET	SB switch
Q417	FET	APC switch
Q418	FET	Beat shift switch
Q420	FET	S33A switch
D1	Diode	Reverse current prevention
D2,D3	Diode	Surge absorption
D4~6	Varistor	Surge absorption
D13,14	Diode	Reverse current prevention
D101	Diode	Local switch
D105	Zener diode	Voltage protection
D106~109	Diode	Antenna switch
D110,111	Varistor	Surge absorption
D202~209	Variable capacitance diode	Vari-cap tune
D210	Diode	Local switch
D303,304	Variable capacitance diode	Frequency control
D306~312	Variable capacitance diode	Frequency control
D313	Diode	Ripple filter
D314	Diode	Bypass diode
D401	Diode	Reverse protection
D402~404	Diode	Detection
D405	Diode	Reverse current prevention

COMPONENTS DESCRIPTION

Control unit (X57-6820-XX B/5)

Ref. No.	Part name	Description
IC601,602	IC	Audio AMP
IC603	IC	OP AMP (AF Pre-AMP/TX AF AMP)
IC604	IC	AF mute switch
IC606	IC	Voltage regulator (28M)
IC701~703	IC	Shift register
IC704	IC	DC AMP for LCD voltage
IC801	IC	Voltage regulator (33M)
IC802	IC	Voltage regulator (33A)
IC803	IC	Voltage regulator (15D)
IC804	IC	Voltage detector (5.6V)
IC805	IC	DC/DC converter (3.6V)
IC806	IC	Voltage regulator (25D)
IC807	IC	Voltage regulator (5M)
IC808	IC	DC/DC converter (15V)
Q601	FET	EXT/INT gain convert switch
Q605	Transistor	5A AVR switch
Q606	FET	5A AVR switch
Q607	Transistor	Noise canceler switch
Q608	Transistor	5A AVR
Q609	FET	External audio mute switch
Q610	FET	External audio mute switch
Q611	FET	Internal audio mute switch
Q612	FET	Internal audio mute switch
Q702	FET	PSW switch
Q703	FET	Busy LED switch
Q704	FET	TX LED switch
Q705,706	Transistor	Power supply control switch
Q801	FET	Switch (3.6V DC/DC)
Q802	FET	Switch (15V DC/DC)
D604	Diode	Surge absorption
D608,609	Diode	Reverse current prevention
D701~704	Diode	Reverse current prevention
D705~708	LED	Key backlight
D709	LED	LCD backlight
D711,712	LED	Key backlight
D713	LED	LCD backlight
D715,716	LED	Key backlight
D717~719	Diode	Reverse current prevention
D720	Zener diode	AVR for backlight LED
D723	LED	LCD backlight
D801	Diode	Reverse current prevention
D802	Diode	Reverse protection
D803,804	Diode	Reverse protection
D805	Diode	Reverse protection

Top Panel unit (X57-6820-XX C/5)

Ref. No.	Part name	Description
D901	LED	TX/RX LED

PARTS LIST

∗ New Parts. ⚠ indicates safety critical components.
Parts without **Parts No.** are not supplied.
Les articles non mentionnes dans le **Parts No.** ne sont pas fournis.
Teile ohne **Parts No.** werden nicht geliefert.

L: Scandinavia **K**: USA **P**: Canada
Y: PX (Far East, Hawaii) **T**: England **E**: Europe
Y: AAFES (Europe) **X**: Australia **M**: Other Areas

TK-5210 (Y50-5950-XX)

Ref. No.	Address	New parts	Parts No.	Description	Destination
			TK-5210		
1	1A	∗	A02-3875-01	MAIN CABINET	K
2	1D	∗	A02-3877-01	MAIN CABINET(4KEY)	K2
3	1C	∗	A02-3879-01	MAIN CABINET(DTMF)	K3
4	3A,3C	∗	A10-4084-01	CHASSIS	
5	2B,2D	∗	A62-1104-02	PANEL(TOP)	
6	3A,3C	∗	A82-0057-02	REAR PANEL	
7	2B,2D	∗	B03-3612-04	DRESSING PLATE(16CH)	
8	1B,2E	∗	B09-0682-13	CAP(SP/MIC) ACCESSORY	
9	2B,2D	∗	B11-1821-03	ILLUMINATION GUIDE(TX-BUSY)	
10	1C	∗	B11-1832-04	FILTER(LCD)	K2,K3
11	1C	∗	B38-0891-05	LCD ASSY	K2,K3
12	3A,3C		B41-1841-04	CAUTION STICKER(HUMAN BODY PROTECTION)	
13	1B,1D	∗	B43-1171-04	BADGE(FRONT)	
14	2B,2D	∗	B43-1172-04	BADGE(REAR)	
15	2E	∗	B59-2390-00	PAMPHLET(HUMAN BODY PROTECTION)	
16	2E	∗	B59-2393-00	SUB-INSTRUCTION MANUAL(QRC)	
17	2E	∗	B62-1796-00	INSTRUCTION MANUAL	
18	3A	∗	B72-2247-04	MODEL NAME-PLATE	K
19	3C	∗	B72-2248-04	MODEL NAME-PLATE	K2
20	3C	∗	B72-2249-04	MODEL NAME-PLATE	K3
22	2A,2C		E37-0722-05	LEAD WIRE WITH CONNECTOR(UNIV)	
23	2B,2D	∗	E37-1126-15	LEAD WIRE WITH CONNECTOR(ANT)	
24	2C	∗	E37-1128-05	FLAT CABLE(CN19-CN604)	K2,K3
25	3B,3D	∗	E58-0510-05	RECTANGULAR RECEPTACLE(UNIV)	
26	3A,3C	∗	E72-0420-13	TERMINAL BLOCK(BATT+)	
27	3A,3C	∗	F07-1887-02	COVER ASSY	
28	2A,2C	∗	F10-2499-02	SHIELDING PLATE(TX-RX PCB)	
29	2A,2C	∗	F20-3360-04	INSULATING SHEET	
30	3A,3C	∗	G10-1327-04	FIBROUS SHEET(AIR)	
31	1B,1D	∗	G10-1338-04	FIBROUS SHEET(SP)	
32	3A,3C	∗	G10-1346-04	FIBROUS SHEET(CHASSIS)	
33	1C	∗	G11-4302-04	SHEET(LCD)	K2,K3
34	3A,3C	∗	G11-4303-14	SHEET(PTT)	
35	1B,2E	∗	G11-4340-04	RUBBER SHEET(CAP) ACCESSORY	
36	-	∗	G11-4346-08	SHEET(UNIV)	
37	3B,3D	∗	G11-4356-04	SHEET(CH)	
38	3A,3C	∗	G11-4360-04	SHEET(TERMINAL BLOCK)	
39	1A,1C	∗	G13-2036-04	CUSHION(MIC)	
40	3A,2C,3C	∗	G13-2046-04	CUSHION(UNIV)	
41	1A,2C,3A,3C	∗	G13-2070-04	CUSHION(CORD ASSY)	
42	3A,3C	∗	G13-2071-04	CONDUCTIVE CUSHION(CHASSIS/PCB)	
43	2B,2D	∗	G13-2079-04	CUSHION(VOL)	
44	1C	∗	G13-2087-04	CUSHION(LCD)	K2,K3
45	2B,2D	∗	G53-1628-04	PACKING(VOL TORQ-UP)	
46	2B,2D	∗	G53-1629-05	PACKING(VOL,CH O-RING)	
47	2B,2D	∗	G53-1630-05	PACKING(ANT O-RING)	
48	2B,2D	∗	G53-1631-05	PACKING(LEVER SW O-RING)	
49	1B,1D	∗	G53-1633-04	PACKING(SP)	
50	1B,1D,2A,2C	∗	G53-1634-14	PACKING(MAIN MIC,NC MIC)	
51	2A,2C	∗	G53-1637-04	PACKING(CHASSIS-FRONT)	
52	2B,2D	∗	G53-1638-04	PACKING(CHASSIS-TOP)	
53	3A,3C	∗	G53-1640-03	PACKING(BATT)	
54	3A,3C	∗	G53-1649-05	PACKING(BATT- O-RING)	
55	3A,3C	∗	G53-1663-03	PACKING(TERMINAL BLOCK)	
57	2E	∗	H52-2050-02	ITEM CARTON CASE	
58	1C	∗	J19-5475-02	HOLDER(LCD)	K2,K3
59	2B,2D	∗	J19-5477-04	HOLDER(EMG)	
60	2B,2D	∗	J21-8482-03	MOUNTING HARDWARE(TOP)	
61	2B,2D	∗	J21-8483-03	MOUNTING HARDWARE(SP)	
62	3A,3C	∗	J21-8484-04	MOUNTING HARDWARE(NC MIC)	
63	2B,2D	∗	J21-8486-04	MOUNTING HARDWARE(LEVER SW)	
64	2B,2D	∗	J21-8495-04	MOUNTING HARDWARE(LEVER SW PANEL SIDE)	
65	2E	∗	J29-0710-15	BELT CLIP ACCESSORY	
66	2B,2D	∗	J39-0646-03	SPACER(VOL)	
67	2B,2D	∗	J39-0647-03	SPACER(16CH)	
68	2B,2D	∗	J82-0096-05	FPC(VOL/CH)	
69	3A,3C	∗	J82-0097-15	FPC(UNIV)	
70	2B,2D	∗	J82-0098-05	FPC(SP/MIC)	
71	2A,2C	∗	J82-0104-05	FPC(CONTROL-TOP)	
72	3A,3C	∗	J99-0377-04	ADHESIVE SHEET(PTT)	
73	3A,3C	∗	J99-0380-04	ADHESIVE SHEET(ANT PCB)	
74	2A,2C	∗	J99-0381-04	ADHESIVE SHEET(CONTROL-TOP FPC)	
75	1B,1D	∗	J99-0383-14	ADHESIVE SHEET(SP)	
76	1C	∗	J99-0390-04	ADHESIVE SHEET(LCD FILTER)	K2,K3
77	1C	∗	J99-0393-04	ADHESIVE SHEET	K2,K3
78	1C	∗	J99-0394-04	ADHESIVE SHEET	K2,K3
79	3A,3C	∗	J99-0395-04	ADHESIVE SHEET(BATT-)	
80	2B,2D	∗	K29-9319-03	KEY TOP(EMG)	
81	1D	∗	K29-9320-03	KEY TOP(4KEY)	K2
82	1C	∗	K29-9321-13	KEY TOP(DTMF)	K3
83	2B,2D	∗	K29-9322-03	KNOB(VOL)	
84	2B,2D	∗	K29-9323-03	KNOB(16CH)	
85	2B,2D	∗	K29-9324-13	KNOB(CONCENTRIC SW)	
86	2B,2D	∗	K29-9325-04	KNOB(LEVER SW)	
87	1A,1C	∗	K29-9327-03	KEY TOP(PTT)	
88	1A,1C	∗	K29-9328-02	KNOB(PTT)	
A	1B,2E		N08-0531-04	DRESSED SCREW(CAP) ACCESSORY	
B	2B,2D	∗	N09-2439-15	SPECIAL SCREW(SP)	
C	3A,3C	∗	N09-2440-05	SPECIAL SCREW(CASE)	
D	3A,3C	∗	N09-2441-05	SPECIAL SCREW(COVER ASSY)	
E	2B,2D	∗	N09-2442-05	SPECIAL SCREW(ANT)	
F	3A,3C	∗	N09-2443-04	HEXAGON HEAD SCREW(BATT-)	
H	2B,2D	∗	N14-0813-14	CIRCULAR NUT(VOL)	
I	2B,2D	∗	N14-0814-04	CIRCULAR NUT(CH)	
J	2B,2D	∗	N14-0815-04	CIRCULAR NUT(ANT)	
K	2B,2D	∗	N14-0817-04	HEXAGON NUT(LEVER SW)	
L	3A,3C	∗	N19-0682-04	SPECIAL WASHER(BATT-)	
M	2E		N30-3008-60	PAN HEAD MACHINE SCREW(BELT CLIP)	
N	2B,2D		N32-2004-46	FLAT HEAD MACHINE SCREW(TOP)	
P	1A,1C,2A,2B 2C,2D,3C		N83-2006-46	PAN HEAD TAPTITE SCREW(CONT/TXRX)	
90	3B,3D	∗	R31-0654-05	VARIABLE RESISTOR(VOL)	
91	3B,3D	∗	S60-0431-05	ROTARY SWITCH(CH)	
92	1C	∗	S79-0454-05	KEYBOARD ASSY(4KEY,DTMF)	K2,K3

PARTS LIST

TK-5210
TX-RX UNIT (X57-6820-XX)

Ref. No.	Address	New parts	Parts No.	Description	Destination
93	1B,1D	*	T07-0755-05	SPEAKER	
94	2B,2D		T91-0575-05	MIC ELEMENTT(MAIN MIC,NC MIC)	
95	1C		W09-0971-05	LITHIUM CELL	K2,K3
96	3A,3C	*	X41-3690-10	SWITCH UNIT(FPC(PTT))	
97	1A,2C	*	X42-3270-10	CORD ASSY(FPC(50PIN))	
TX-RX UNIT (X57-6820-XX) -10 :K -11 :K2 -12 :K3					
D705-708			B30-2171-05	LED	K3
D705,706			B30-2171-05	LED	K2
D709		*	B30-2261-05	LED	K2,K3
D711,712			B30-2171-05	LED	K3
D713		*	B30-2261-05	LED	K2,K3
D715,716			B30-2171-05	LED	K3
D723		*	B30-2261-05	LED	K2,K3
D901			B30-2019-05	LED(RE/GR)	
C1			CK73HB1A104K	CHIP C 0.10UF K	
C2			CK73HB1C103K	CHIP C 0.010UF K	
C3 ,4			CK73HB1A104K	CHIP C 0.10UF K	
C5			CK73HB1H102K	CHIP C 1000PF K	
C7			CK73HB1A104K	CHIP C 0.10UF K	
C8			CK73HB1H102K	CHIP C 1000PF K	
C9 ,10			CK73HB1A104K	CHIP C 0.10UF K	
C11			CK73HB1H102K	CHIP C 1000PF K	
C12 -14			CK73HB1A104K	CHIP C 0.10UF K	
C15			CK73HB1C103K	CHIP C 0.010UF K	
C16 ,17			CC73HCH1H101J	CHIP C 100PF J	
C18			CK73FB0J106K	CHIP C 10UF K	
C19			CC73HCH1H101J	CHIP C 100PF J	
C20			CK73HB1H332K	CHIP C 3300PF K	
C21 ,22			CK73HB1C103K	CHIP C 0.010UF K	
C23			CC73HCH1H101J	CHIP C 100PF J	
C24			CK73FB0J106K	CHIP C 10UF K	
C26			CK73HB1C103K	CHIP C 0.010UF K	
C27 -30			CC73HCH1H101J	CHIP C 100PF J	
C31 -33			CK73HB1C103K	CHIP C 0.010UF K	
C34			CK73HB1A104K	CHIP C 0.10UF K	
C35			CK73HB1C103K	CHIP C 0.010UF K	
C36			CK73HB1A104K	CHIP C 0.10UF K	
C37 ,38			CK73HB1C103K	CHIP C 0.010UF K	
C39			CC73HCH1H101J	CHIP C 100PF J	
C40 ,41			CK73HB1A104K	CHIP C 0.10UF K	
C43 -48			CK73HB1C103K	CHIP C 0.010UF K	
C49 ,50			CK73HB1H102K	CHIP C 1000PF K	
C51			CK73HB1A104K	CHIP C 0.10UF K	
C52 -55			CK73HB1C103K	CHIP C 0.010UF K	
C57 ,58			CC73HCH1H101J	CHIP C 100PF J	
C59 ,60			CK73HB1H102K	CHIP C 1000PF K	
C61			CC73HCH1H470J	CHIP C 47PF J	
C62			CK73HB1A104K	CHIP C 0.10UF K	
C65 -69			CK73HB1H102K	CHIP C 1000PF K	
C70 ,71			CK73HB1A104K	CHIP C 0.10UF K	
C75			CK73HB1H102K	CHIP C 1000PF K	
C86			CK73HB1H471K	CHIP C 470PF K	
C101			CK73HB1C103K	CHIP C 0.010UF K	
C102-106			CK73HB1H102K	CHIP C 1000PF K	
C107			CC73HCH1H330J	CHIP C 33PF J	
C108			CK73HB1H102K	CHIP C 1000PF K	
C110,111			CK73HB1H102K	CHIP C 1000PF K	

Ref. No.	Address	New parts	Parts No.	Description	Destination
C112			CC73HCH1H270J	CHIP C 27PF J	
C113			CK73HB1H102K	CHIP C 1000PF K	
C114			CC73HCH1H180J	CHIP C 18PF J	
C116			CK73HB1H102K	CHIP C 1000PF K	
C118			CK73HB1H471K	CHIP C 470PF K	
C120			CC73GCH1H560J	CHIP C 56PF J	
C121			CK73HB1H102K	CHIP C 1000PF K	
C122			CC73GCH1H040B	CHIP C 4.0PF B	
C123			CC73HCH1H101J	CHIP C 100PF J	
C124			CK73HB1H102K	CHIP C 1000PF K	
C128			CK73HB1H102K	CHIP C 1000PF K	
C130			CK73HB1H102K	CHIP C 1000PF K	
C132			CK73HB1H102K	CHIP C 1000PF K	
C133			CK73GB1E105K	CHIP C 1.0UF K	
C134			CK73HB1C103K	CHIP C 0.010UF K	
C135			CK73GB1H102K	CHIP C 1000PF K	
C136			CK73HB1H102K	CHIP C 1000PF K	
C137			CC73GCH1H330J	CHIP C 33PF J	
C138			CK73GB0J475K	CHIP C 4.7UF K	
C139			CC73GCH1H390J	CHIP C 39PF J	
C140			CK73GB1H102K	CHIP C 1000PF K	
C141			CC73GCH1H220J	CHIP C 22PF J	
C142			CC73GCH1H680J	CHIP C 68PF J	
C144			CK73GB1H102K	CHIP C 1000PF K	
C145			CC73GCH1H270J	CHIP C 27PF J	
C146			CK73HB1C103K	CHIP C 0.010UF K	
C147			CC73GCH1H270J	CHIP C 27PF J	
C148			CK73GB1H102K	CHIP C 1000PF K	
C149			CC73HCH1H050B	CHIP C 5.0PF B	
C150			CC73HCH1H100D	CHIP C 10PF D	
C151			CC73HCH1H270J	CHIP C 27PF J	
C156			CC73HCH1H050B	CHIP C 5.0PF B	
C157			CC73HCH1H120J	CHIP C 12PF J	
C158-160			CK73GB1H102K	CHIP C 1000PF K	
C162,163			CK73HB1H102K	CHIP C 1000PF K	
C166,167			CC73HCH1H120J	CHIP C 12PF J	
C168,169			CC73GCH1H040C	CHIP C 4.0PF C	
C170			CC73HCH1H120J	CHIP C 12PF J	
C171			CC73HCH1H100D	CHIP C 10PF D	
C173			CK73HB1C103K	CHIP C 0.010UF K	
C174			CK73HB1H102K	CHIP C 1000PF K	
C176-178			CK73HB1H102K	CHIP C 1000PF K	
C180,181			CK73HB1H102K	CHIP C 1000PF K	
C182,183			CC73HCH1H150J	CHIP C 15PF J	
C184			CC73HCH1H180J	CHIP C 18PF J	
C185			CK73HB1C103K	CHIP C 0.010UF K	
C186			CK73HB1H102K	CHIP C 1000PF K	
C190			CC73GCH1H050B	CHIP C 5.0PF B	
C192			CC73GCH1H390J	CHIP C 39PF J	
C193,194			CC73GCH1H330J	CHIP C 33PF J	
C196,197			CC73GCH1H330J	CHIP C 33PF J	
C201			CK73GB1E105K	CHIP C 1.0UF K	
C203			CK73HB1A104K	CHIP C 0.10UF K	
C204			CK73HB1H102K	CHIP C 1000PF K	
C205			CC73HCH1H100C	CHIP C 10PF C	
C206			CK73HB1H102K	CHIP C 1000PF K	
C207			CC73HCH1H030C	CHIP C 3.0PF C	
C208			CK73HB1A104K	CHIP C 0.10UF K	
C210			CK73HB1H102K	CHIP C 1000PF K	
C212-215			CK73HB1H102K	CHIP C 1000PF K	

PARTS LIST

TX-RX UNIT (X57-6820-XX)

Ref. No.	Address	New parts	Parts No.	Description	Destination
C217			CK73GB1E105K	CHIP C 1.0UF K	
C218,219			CK73HB1H102K	CHIP C 1000PF K	
C220			CC73HCH1H060B	CHIP C 6.0PF B	
C221			CC73HCH1H030C	CHIP C 3.0PF C	
C222			CC73HCH1H1R5B	CHIP C 1.5PF B	
C223			CK73HB1H102K	CHIP C 1000PF K	
C225			CC73GCH1H060B	CHIP C 6.0PF B	
C227			CC73HCH1H150J	CHIP C 15PF J	
C228			CC73HCH1H020C	CHIP C 2.0PF C	
C229			CC73HCH1H180J	CHIP C 18PF J	
C230			CK73GB1H102K	CHIP C 1000PF K	
C231			CC73HCH1H1R5C	CHIP C 1.5PF C	
C232			CK73HB1A104K	CHIP C 0.10UF K	
C233			CC73HCH1H090D	CHIP C 9.0PF D	
C235			CK73HB1H471K	CHIP C 470PF K	
C236			CK73HB1H102K	CHIP C 1000PF K	
C237			CK73HB1C223K	CHIP C 0.022UF K	
C238,239			CK73HB1H471K	CHIP C 470PF K	
C240			CK73GB0J475K	CHIP C 4.7UF K	
C241			CK73HB1A104K	CHIP C 0.10UF K	
C242			CK73HB1H102K	CHIP C 1000PF K	
C243			CK73HB1H471K	CHIP C 470PF K	
C244,245			CK73HB1A104K	CHIP C 0.10UF K	
C246			CK73GB1H103K	CHIP C 0.010UF K	
C248			CC73GCH1H150J	CHIP C 15PF J	
C250			CC73HCH1H270J	CHIP C 27PF J	
C252			CC73HCH1H120J	CHIP C 12PF J	
C253-256			CK73HB1C103K	CHIP C 0.010UF K	
C257			CK73HB1A104K	CHIP C 0.10UF K	
C259			CC73HCH1H470J	CHIP C 47PF J	
C260			CC73HCH1H080D	CHIP C 8.0PF D	
C261			CK73HB1H471K	CHIP C 470PF K	
C262			CK73HB1C103K	CHIP C 0.010UF K	
C263			CC73HCH1H220J	CHIP C 22PF J	
C264			CC73HCH1H820J	CHIP C 82PF J	
C265			CC73HCH1H680J	CHIP C 68PF J	
C266			CK73HB1H102K	CHIP C 1000PF K	
C267,268			CK73HB1A104K	CHIP C 0.10UF K	
C270,271			CK73HB1A104K	CHIP C 0.10UF K	
C272,273			CK73HB1C103K	CHIP C 0.010UF K	
C274			CK73FB0J106K	CHIP C 10UF K	
C275,276			CK73HB1A104K	CHIP C 0.10UF K	
C277			CC73HCH1H390J	CHIP C 39PF J	
C278,279			CC73HCH1H151J	CHIP C 150PF J	
C281-285			CK73HB1A104K	CHIP C 0.10UF K	
C288			CK73HB1H102K	CHIP C 1000PF K	
C289			CC73HCH1H101J	CHIP C 100PF J	
C292,293			CK73HB1A104K	CHIP C 0.10UF K	
C294			CK73HB1H471K	CHIP C 470PF K	
C295,296			CC73HCH1H470J	CHIP C 47PF J	
C301			CK73HB1H102K	CHIP C 1000PF K	
C302			CC73HCH1H470J	CHIP C 47PF J	
C304,305			CK73HB1A104K	CHIP C 0.10UF K	
C306			CC73HCH1H470J	CHIP C 47PF J	
C309			CK73HB1H471K	CHIP C 470PF K	
C311			CC73HCH1H470J	CHIP C 47PF J	
C312			CK73GB1E105K	CHIP C 1.0UF K	
C313			CK73HB1H102K	CHIP C 1000PF K	
C315,316			CC73HCH1H101J	CHIP C 100PF J	
C318			CK73HB1C103K	CHIP C 0.010UF K	

Ref. No.	Address	New parts	Parts No.	Description	Destination
C320			CK73HB1A104K	CHIP C 0.10UF K	
C323			CK73HB1H471K	CHIP C 470PF K	
C325			CK73HB0J105K	CHIP C 1.0UF K	
C329			CK73HB1H471K	CHIP C 470PF K	
C330		*	C93-0787-05	CERAMIC 0.1UF 50WV	
C331			CK73HB1H102K	CHIP C 1000PF K	
C333			C92-0001-05	CHIP-TAN 0.1UF 35WV	
C334			C92-0519-05	CHIP-TAN 1.0UF 25WV	
C335			CC73HCH1H101J	CHIP C 100PF J	
C336			CK73EB1H223K	CHIP C 0.022UF K	
C338			CK73HB1H471K	CHIP C 470PF K	
C340			CK73HB1H122K	CHIP C 1200PF K	
C341			CK73HB1H102K	CHIP C 1000PF K	
C343			C92-0713-05	CHIP-TAN 10UF 6.3WV	
C344-346			CK73HB1H471K	CHIP C 470PF K	
C347			CC73HCH1H560J	CHIP C 56PF J	
C348			CC73HCH1H100D	CHIP C 10PF D	
C350			CK73HB1H182K	CHIP C 1800PF K	
C352			CC73HCH1H010C	CHIP C 1.0PF C	
C353			CC73HCH1H150J	CHIP C 15PF J	
C354			CC73GCH1H040B	CHIP C 4.0PF B	
C355			CC73HCH1H040C	CHIP C 4.0PF C	
C356			CC73HCH1H0R5B	CHIP C 0.5PF B	
C357			CC73HCH1H100D	CHIP C 10PF D	
C358			CK73HB1H471K	CHIP C 470PF K	
C359			CC73GCH1H040B	CHIP C 4.0PF B	
C360			CK73HB1H471K	CHIP C 470PF K	
C361			CC73GCH1H060B	CHIP C 6.0PF B	
C362			CC73HCH1H080D	CHIP C 8.0PF D	
C363			CC73GCH1H050B	CHIP C 5.0PF B	
C364			CC73HCH1H080D	CHIP C 8.0PF D	
C365			CK73HB1H471K	CHIP C 470PF K	
C366			CC73GCH1H030B	CHIP C 3.0PF B	
C367			CK73HB1H471K	CHIP C 470PF K	
C368			CC73GCH1H040B	CHIP C 4.0PF B	
C369			CK73GB0J475K	CHIP C 4.7UF K	
C370			CK73HB1H471K	CHIP C 470PF K	
C371,372			CC73HCH1H0R5B	CHIP C 0.5PF B	
C373,374			CK73HB1H471K	CHIP C 470PF K	
C375			CC73HCH1H060D	CHIP C 6.0PF D	
C376			CC73HCH1H020C	CHIP C 2.0PF C	
C377-383			CK73HB1H102K	CHIP C 1000PF K	
C384			CK73HB0J105K	CHIP C 1.0UF K	
C385			CC73HCH1H150J	CHIP C 15PF J	
C386			CK73HB1H102K	CHIP C 1000PF K	
C387			CK73GB1E105K	CHIP C 1.0UF K	
C388			CK73GB1E153K	CHIP C 0.015UF K	
C389			CK73GB0J475K	CHIP C 4.7UF K	
C390			CK73HB1H471K	CHIP C 470PF K	
C391,392			CK73HB1A104K	CHIP C 0.10UF K	
C393			CK73HB1H102K	CHIP C 1000PF K	
C396,397			CK73HB1H102K	CHIP C 1000PF K	
C400			CK73GB0J475K	CHIP C 4.7UF K	
C401			CK73HB1H102K	CHIP C 1000PF K	
C402			CK73FB0J106K	CHIP C 10UF K	
C403			CK73HB0J105K	CHIP C 1.0UF K	
C404			CK73GB1A105K	CHIP C 1.0UF K	
C405			CK73GB1E105K	CHIP C 1.0UF K	
C406			CK73HB1H102K	CHIP C 1000PF K	
C407			CK73GB1E105K	CHIP C 1.0UF K	

PARTS LIST

TX-RX UNIT (X57-6820-XX)

Ref. No.	Address	New parts	Parts No.	Description	Destination
C408-410			CK73HB1H102K	CHIP C 1000PF K	
C411,412			C92-0784-05	TANTALUM 4.7UF 10WV	
C413			CK73HB0J105K	CHIP C 1.0UF K	
C414			CC73HCH1H101J	CHIP C 100PF J	
C415			CK73HB1A104K	CHIP C 0.10UF K	
C416			CC73HCH1H101J	CHIP C 100PF J	
C417,418			CK73GB0J475K	CHIP C 4.7UF K	
C419			CK73FB0J106K	CHIP C 10UF K	
C420			CK73HB0J105K	CHIP C 1.0UF K	
C421			C92-0713-05	CHIP-TAN 10UF 6.3WV	
C422,423			CK73HB1A104K	CHIP C 0.10UF K	
C424,425			CK73HB0J105K	CHIP C 1.0UF K	
C426			CK73HB1A104K	CHIP C 0.10UF K	
C427			CK73HB0J105K	CHIP C 1.0UF K	
C428			CK73HB1A104K	CHIP C 0.10UF K	
C430			CK73HB1A104K	CHIP C 0.10UF K	
C431,432			CC73HCH1H151J	CHIP C 150PF J	
C433			CK73HB1H471K	CHIP C 470PF K	
C434			CK73HB1A104K	CHIP C 0.10UF K	
C436			CK73HB0J105K	CHIP C 1.0UF K	
C437			CK73HB1A104K	CHIP C 0.10UF K	
C438,439			CK73FB0J106K	CHIP C 10UF K	
C440-442			CK73HB1A104K	CHIP C 0.10UF K	
C443			CK73HB1H102K	CHIP C 1000PF K	
C444			CK73GB0J475K	CHIP C 4.7UF K	
C445			CK73HB0J224K	CHIP C 0.22UF K	
C446			CK73FB0J106K	CHIP C 10UF K	
C447			CK73HB0J224K	CHIP C 0.22UF K	
C448			CK73HB1H122K	CHIP C 1200PF K	
C449			CC73HCH1H101J	CHIP C 100PF J	
C451			CK73GB0J475K	CHIP C 4.7UF K	
C452			CK73HB0J105K	CHIP C 1.0UF K	
C453			CK73HB1A104K	CHIP C 0.10UF K	
C454			CK73GB0J475K	CHIP C 4.7UF K	
C455			CC73HCH1H151J	CHIP C 150PF J	
C456			CK73HB1C103K	CHIP C 0.010UF K	
C457			CK73GB0J475K	CHIP C 4.7UF K	
C458			CK73HB1H152K	CHIP C 1500PF K	
C459			CC73HCH1H101J	CHIP C 100PF J	
C460			CK73HB1A104K	CHIP C 0.10UF K	
C461			CC73HCH1H101J	CHIP C 100PF J	
C462			CK73HB1A104K	CHIP C 0.10UF K	
C463			CK73HB0J105K	CHIP C 1.0UF K	
C465,466			CK73HB1A104K	CHIP C 0.10UF K	
C468			CC73HCH1H101J	CHIP C 100PF J	
C469			CK73HB1A104K	CHIP C 0.10UF K	
C479			CK73HB1A104K	CHIP C 0.10UF K	
C480			CC73HCH1H101J	CHIP C 100PF J	
C481,482			CK73FB0J106K	CHIP C 10UF K	
C483			CK73HB1H102K	CHIP C 1000PF K	
C484			CK73HB0J105K	CHIP C 1.0UF K	
C485			CK73HB1A104K	CHIP C 0.10UF K	
C486			CK73HB1H102K	CHIP C 1000PF K	
C487			CC73HCH1H220J	CHIP C 22PF J	
C488-490			CK73HB1H102K	CHIP C 1000PF K	
C491			CK73HB1A104K	CHIP C 0.10UF K	
C492,493			CK73FB0J106K	CHIP C 10UF K	
C494			CK73HB1C103K	CHIP C 0.010UF K	
C495,496			CK73HB1A104K	CHIP C 0.10UF K	
C497,498			CK73GB1E105K	CHIP C 1.0UF K	

Ref. No.	Address	New parts	Parts No.	Description	Destination
C499			CK73HB1H471K	CHIP C 470PF K	
C505-515			CC73HCH1H101J	CHIP C 100PF J	
C601			CK73HB1A104K	CHIP C 0.10UF K	
C602-604			CK73HB1H471K	CHIP C 470PF K	
C606			CK73GB1A105K	CHIP C 1.0UF K	
C607			C92-0585-05	CHIP-TAN 4.7UF 16WV	
C608			CK73GB1A105K	CHIP C 1.0UF K	
C609			C92-0585-05	CHIP-TAN 4.7UF 16WV	
C610,611			CK73HB1H102K	CHIP C 1000PF K	
C612,613			CK73GB1A105K	CHIP C 1.0UF K	
C614,615			CK73HB1A104K	CHIP C 0.10UF K	
C620			CC73HCH1H101J	CHIP C 100PF J	
C621		*	CK73GB1C474K	CHIP C 0.47UF K	
C622			CK73GB0J475K	CHIP C 4.7UF K	
C623			CK73HB1A104K	CHIP C 0.10UF K	
C624			CK73GB1E223K	CHIP C 0.022UF K	
C625			CK73HB1H102K	CHIP C 1000PF K	
C627,628		*	CK73GB1C474K	CHIP C 0.47UF K	
C629,630			CK73HB1H471K	CHIP C 470PF K	
C631			CK73HB1A104K	CHIP C 0.10UF K	
C632,633			CK73HB1H471K	CHIP C 470PF K	
C638			CK73HB1A104K	CHIP C 0.10UF K	
C639,640			CK73HB0J105K	CHIP C 1.0UF K	
C643			CK73HB1A104K	CHIP C 0.10UF K	
C710-712			CK73HB1C103K	CHIP C 0.010UF K	
C714			CC73HCH1H101J	CHIP C 100PF J	K2,K3
C715			CK73HB1A104K	CHIP C 0.10UF K	K2,K3
C716-722			CK73HB1E472K	CHIP C 4700PF K	
C750-754		*	CK73GB1C474K	CHIP C 0.47UF K	K2,K3
C755			CK73HB1C103K	CHIP C 0.010UF K	K2,K3
C759-762			CK73GB1E105K	CHIP C 1.0UF K	K2,K3
C763-765			CK73HB1E472K	CHIP C 4700PF K	
C766			CK73HB1H102K	CHIP C 1000PF K	K2,K3
C767			CK73HB1C103K	CHIP C 0.010UF K	K2,K3
C768			CK73HB1H102K	CHIP C 1000PF K	K2,K3
C769			CK73HB1C103K	CHIP C 0.010UF K	K2,K3
C770			CK73HB1H471K	CHIP C 470PF K	K2,K3
C801-804		*	C92-0821-05	TANTALUM 10UF 20WV	
C805-809			CK73GB1E105K	CHIP C 1.0UF K	
C811			CK73GB1E105K	CHIP C 1.0UF K	
C812			C92-0765-05	TANTALUM 4.7UF 16WV	
C813			CK73HB1A104K	CHIP C 0.10UF K	
C814-816			CK73HB1H102K	CHIP C 1000PF K	
C817			CK73HB1A104K	CHIP C 0.10UF K	
C818			CK73HB1H102K	CHIP C 1000PF K	
C819,820			CK73FB0J106K	CHIP C 10UF K	
C821			CC73HCH1H820J	CHIP C 82PF J	
C822			CK73FB0J106K	CHIP C 10UF K	
C823,824			CK73HB1H102K	CHIP C 1000PF K	
C825			CK73FB0J106K	CHIP C 10UF K	
C826			C92-0784-05	TANTALUM 4.7UF 10WV	
C827			CK73HB1A104K	CHIP C 0.10UF K	
C828		*	C92-0822-05	TANTALUM 33UF 10WV	
C829			CK73HB1C103K	CHIP C 0.010UF K	
C830			CC73HCH1E181J	CHIP C 180PF J	
C831			CC73HCH1H220J	CHIP C 22PF J	
C832			CK73HB1H471K	CHIP C 470PF K	
C833-836			CK73GB1E105K	CHIP C 1.0UF K	
C838			CK73HB1H102K	CHIP C 1000PF K	
C839			CK73HB1C103K	CHIP C 0.010UF K	

PARTS LIST

TX-RX UNIT (X57-6820-XX)

Ref. No.	Address	New parts	Parts No.	Description	Destination
CN7			E40-5856-05	FLAT CABLE CONNECTOR	
CN14			E40-6357-05	PIN ASSY	
CN19		*	E40-6431-05	FLAT CABLE CONNECTOR	K2,K3
CN101,102			E04-0403-05	PIN SOCKET	
CN408		*	E40-6422-05	SOCKET FOR PIN ASSY	
CN601		*	E40-6421-05	PIN ASSY	
CN603			E40-5948-05	FLAT CABLE CONNECTOR	
CN604		*	E40-6431-05	FLAT CABLE CONNECTOR	K2,K3
CN751		*	E40-6337-05	FLAT CABLE CONNECTOR	K2,K3
CN752		*	E40-6388-05	FLAT CABLE CONNECTOR	
CN753		*	E40-5664-05	FLAT CABLE CONNECTOR	
CN901			E40-6358-05	SOCKET FOR PIN ASSY	
CN902		*	E40-6391-05	FLAT CABLE CONNECTOR	
CN903			E40-6053-05	FLAT CABLE CONNECTOR	
CN904			E04-0403-05	PIN SOCKET	
F1		*	F53-0360-05	FUSE(0.25A)	
F401		*	F53-0372-05	FUSE(3.15A)	
F402		*	F53-0360-05	FUSE(0.25A)	
CN602			J19-5386-05	HOLDER	
CD201		*	L79-1850-05	TUNING COIL	
CF201		*	L72-1017-05	CERAMIC FILTER	
CF202		*	L72-1009-05	CERAMIC FILTER	
CF203		*	L72-1017-05	CERAMIC FILTER	
CF204		*	L72-1018-05	CERAMIC FILTER	
L1 -3			L92-0163-05	BEADS CORE	
L5 -8			L92-0163-05	BEADS CORE	
L9		*	L92-0446-05	BEADS CORE	
L10			L92-0163-05	BEADS CORE	
L13 ,14			L92-0408-05	CHIP FERRITE	
L15 ,16			L92-0163-05	BEADS CORE	
L17 ,18			L92-0162-05	BEADS CORE	
L19		*	L92-0446-05	BEADS CORE	
L22 -24		*	L92-0446-05	BEADS CORE	
L25			L92-0138-05	CHIP FERRITE	
L26			L92-0161-05	BEADS CORE	
L27 ,28		*	L92-0446-05	BEADS CORE	
L29			L92-0161-05	BEADS CORE	
L30		*	L92-0446-05	BEADS CORE	
L31			L92-0140-05	CHIP FERRITE	
L101,102		*	L41-1085-30	SMALL FIXED INDUCTOR	
L103			L92-0140-05	CHIP FERRITE	
L104			L40-5675-92	SMALL FIXED INDUCTOR(56NH)	
L105			L40-1863-92	SMALL FIXED INDUCTOR(1.8NH)	
L106			L92-0149-05	CHIP FERRITE	
L107			L40-3975-92	SMALL FIXED INDUCTOR(39NH)	
L108			L40-1575-92	SMALL FIXED INDUCTOR(15NH)	
L109			L92-0149-05	CHIP FERRITE	
L110			L34-4577-05	AIR-CORE COIL	
L111			L34-4650-05	AIR-CORE COIL	
L113			L34-4567-05	AIR-CORE COIL	
L114			L40-2295-85	SMALL FIXED INDUCTOR(2.2UH)	
L115,116			L34-4576-05	AIR-CORE COIL	
L118			L34-4577-05	AIR-CORE COIL	
L119,120			L34-4576-05	AIR-CORE COIL	
L121			L41-8285-14	SMALL FIXED INDUCTOR	
L122,123		*	L92-0446-05	BEADS CORE	
L124			L40-5675-71	SMALL FIXED INDUCTOR(56NH)	
L125,126			L34-4577-05	AIR-CORE COIL	
L201			L34-4492-05	COIL	
L202			L34-4493-05	COIL	
L203			L41-6885-14	SMALL FIXED INDUCTOR	
L204			L34-4493-05	COIL	
L205			L34-4492-05	COIL	
L206,207			L40-3975-71	SMALL FIXED INDUCTOR(39NH)	
L210			L41-4778-14	SMALL FIXED INDUCTOR	
L211,212			L39-1272-05	TOROIDAL COIL	
L213			L92-0163-05	BEADS CORE	
L214			L39-1272-05	TOROIDAL COIL	
L216,217			L41-5685-14	SMALL FIXED INDUCTOR	
L218			L40-6881-37	SMALL FIXED INDUCTOR(0.680UH)	
L219			L40-1885-92	SMALL FIXED INDUCTOR(180NH)	
L220			L40-1091-86	SMALL FIXED INDUCTOR(1.0UH)	
L221			L41-1585-14	SMALL FIXED INDUCTOR	
L222			L41-1085-14	SMALL FIXED INDUCTOR	
L224			L41-2278-14	SMALL FIXED INDUCTOR	
L302		*	L92-0446-05	BEADS CORE	
L303			L40-4795-85	SMALL FIXED INDUCTOR(4.7UH)	
L304-307			L40-1001-86	SMALL FIXED INDUCTOR(10UH)	
L308,309			L40-2285-92	SMALL FIXED INDUCTOR(220NH)	
L310			L92-0163-05	BEADS CORE	
L311			L40-2285-92	SMALL FIXED INDUCTOR(220NH)	
L312		*	L41-3985-20	SMALL FIXED INDUCTOR	
L313		*	L92-0446-05	BEADS CORE	
L314			L33-1267-05	SMALL FIXED INDUCTOR	
L315			L40-1875-71	SMALL FIXED INDUCTOR(18NH)	
L316			L33-0751-05	SMALL FIXED INDUCTOR	
L317			L40-1575-71	SMALL FIXED INDUCTOR(15NH)	
L318			L40-2285-92	SMALL FIXED INDUCTOR(220NH)	
L319			L40-1075-71	SMALL FIXED INDUCTOR(10NH)	
L320		*	L41-3985-20	SMALL FIXED INDUCTOR	
L321,322			L40-2285-92	SMALL FIXED INDUCTOR(220NH)	
L323			L40-3975-71	SMALL FIXED INDUCTOR(39NH)	
L324		*	L92-0446-05	BEADS CORE	
L325			L40-4775-71	SMALL FIXED INDUCTOR(47NH)	
L327			L40-8275-71	SMALL FIXED INDUCTOR(82NH)	
L330		*	L92-0446-05	BEADS CORE	
L401			L92-0136-05	CHIP FERRITE	
L402,403			L92-0408-05	CHIP FERRITE	
L404			L92-0149-05	CHIP FERRITE	
L405			L92-0140-05	CHIP FERRITE	
L406		*	L92-0446-05	BEADS CORE	
L601			L92-0149-05	CHIP FERRITE	
L602-605			L92-0408-05	CHIP FERRITE	
L606,607			L92-0163-05	BEADS CORE	
L701-703		*	L92-0446-05	BEADS CORE	K
L701-706		*	L92-0446-05	BEADS CORE	K2,K3
L801		*	L33-1462-05	SMALL FIXED INDUCTOR	
L802		*	L33-1469-05	SMALL FIXED INDUCTOR	
L803		*	L33-1462-05	SMALL FIXED INDUCTOR	
X1			L77-1802-05	CRYSTAL RESONATOR(32768HZ)	
X2		*	L77-1962-05	VCXO(18.432M)	
X201		*	L77-1961-05	VCXO(16.8MHZ)	
X301		*	L77-1960-05	VCXO(16.8MHZ)	
XF201		*	L71-0551-45	MCF(49.95MHZ)	
CP3			R90-0743-05	MULTIPLE RESISTOR	
CP6			R90-0745-05	MULTIPLE RESISTOR	
CP7			R90-0743-05	MULTIPLE RESISTOR	
CP8 ,9			R90-0741-05	MULTIPLE RESISTOR	

PARTS LIST

TX-RX UNIT (X57-6820-XX)

Ref. No.	Address	New parts	Parts No.	Description	Destination
CP10-12			R90-0743-05	MULTIPLE RESISTOR	
CP301,302			R90-0741-05	MULTIPLE RESISTOR	
R1			R92-1368-05	CHIP R 0 OHM	
R2			RK73HB1J473J	CHIP R 47K J 1/16W	
R3			RK73HB1J104J	CHIP R 100K J 1/16W	
R4 ,5			RK73HB1J473J	CHIP R 47K J 1/16W	
R6			RK73HB1J474J	CHIP R 470K J 1/16W	
R7			RK73HB1J100J	CHIP R 10 J 1/16W	
R8			RK73HB1J104J	CHIP R 100K J 1/16W	
R9 -11			RK73HB1J474J	CHIP R 470K J 1/16W	
R12			RK73HB1J124J	CHIP R 120K J 1/16W	
R13			RK73HB1J473J	CHIP R 47K J 1/16W	
R14			RK73HB1J100J	CHIP R 10 J 1/16W	
R15			RK73HH1J224D	CHIP R 220K D 1/16W	
R16			RK73HH1J104D	CHIP R 100K D 1/16W	
R18			RK73HB1J103J	CHIP R 10K J 1/16W	
R19			RK73HB1J473J	CHIP R 47K J 1/16W	
R20			RK73HB1J102J	CHIP R 1.0K J 1/16W	
R21 ,22			RK73HB1J474J	CHIP R 470K J 1/16W	
R23			RK73HB1J473J	CHIP R 47K J 1/16W	
R24 ,25			RK73HB1J474J	CHIP R 470K J 1/16W	
R26			RK73HB1J104J	CHIP R 100K J 1/16W	
R27			RK73HB1J102J	CHIP R 1.0K J 1/16W	
R28 -30			RK73HB1J473J	CHIP R 47K J 1/16W	
R31 ,32			RK73HB1J102J	CHIP R 1.0K J 1/16W	
R33 ,34			RK73HB1J473J	CHIP R 47K J 1/16W	
R35			RK73HB1J471J	CHIP R 470 J 1/16W	
R36			RK73HB1J473J	CHIP R 47K J 1/16W	
R37			R92-1368-05	CHIP R 0 OHM	
R38			RK73HB1J102J	CHIP R 1.0K J 1/16W	
R39			RK73HB1J473J	CHIP R 47K J 1/16W	
R40			RK73HB1J102J	CHIP R 1.0K J 1/16W	
R41			RK73HB1J104J	CHIP R 100K J 1/16W	
R42			RK73HB1J473J	CHIP R 47K J 1/16W	
R43			R92-1368-05	CHIP R 0 OHM	
R44			RK73HB1J473J	CHIP R 47K J 1/16W	
R45			R92-1368-05	CHIP R 0 OHM	
R46			RK73HB1J473J	CHIP R 47K J 1/16W	
R47			RK73HB1J103J	CHIP R 10K J 1/16W	
R48			RK73HB1J474J	CHIP R 470K J 1/16W	
R49			RK73HB1J102J	CHIP R 1.0K J 1/16W	
R50			RK73HB1J474J	CHIP R 470K J 1/16W	
R51			RK73HB1J471J	CHIP R 470 J 1/16W	
R52			RK73HB1J102J	CHIP R 1.0K J 1/16W	
R54			RK73HB1J103J	CHIP R 10K J 1/16W	
R55			RK73HB1J102J	CHIP R 1.0K J 1/16W	
R56			RK73HB1J470J	CHIP R 47 J 1/16W	
R57			RK73HB1J474J	CHIP R 470K J 1/16W	
R58			RK73HB1J104J	CHIP R 100K J 1/16W	
R60			RK73HB1J474J	CHIP R 470K J 1/16W	
R61			RK73HB1J104J	CHIP R 100K J 1/16W	
R62			RK73HB1J471J	CHIP R 470 J 1/16W	
R63			RK73HB1J102J	CHIP R 1.0K J 1/16W	
R64			RK73HB1J474J	CHIP R 470K J 1/16W	
R65			RK73HB1J473J	CHIP R 47K J 1/16W	
R66			RK73HB1J104J	CHIP R 100K J 1/16W	
R68			RK73HB1J473J	CHIP R 47K J 1/16W	
R71			RK73HB1J474J	CHIP R 470K J 1/16W	
R72			RK73HB1J470J	CHIP R 47 J 1/16W	
R74			RK73HB1J470J	CHIP R 47 J 1/16W	

Ref. No.	Address	New parts	Parts No.	Description	Destination
R75			RK73HB1J474J	CHIP R 470K J 1/16W	
R76			RK73HB1J470J	CHIP R 47 J 1/16W	
R77			RK73HB1J183J	CHIP R 18K J 1/16W	
R78			RK73HB1J474J	CHIP R 470K J 1/16W	
R79			RK73HB1J100J	CHIP R 10 J 1/16W	
R81			RK73HB1J470J	CHIP R 47 J 1/16W	
R82			RK73HB1J102J	CHIP R 1.0K J 1/16W	
R83			RK73HB1J473J	CHIP R 47K J 1/16W	
R85			RK73HB1J104J	CHIP R 100K J 1/16W	
R87			RK73HB1J104J	CHIP R 100K J 1/16W	
R89			RK73HB1J100J	CHIP R 10 J 1/16W	
R91 -98			RK73HB1J101J	CHIP R 100 J 1/16W	
R99			RK73HB1J474J	CHIP R 470K J 1/16W	
R101			RK73HB1J332J	CHIP R 3.3K J 1/16W	
R102			RK73HB1J272J	CHIP R 2.7K J 1/16W	
R103			RK73HB1J103J	CHIP R 10K J 1/16W	
R104			RK73HB1J330J	CHIP R 33 J 1/16W	
R105			RK73HB1J331J	CHIP R 330 J 1/16W	
R106			RK73HB1J220J	CHIP R 22 J 1/16W	
R107			RK73HB1J152J	CHIP R 1.5K J 1/16W	
R108			RK73HB1J471J	CHIP R 470 J 1/16W	
R109			RK73HB1J330J	CHIP R 33 J 1/16W	
R110			RK73HB1J331J	CHIP R 330 J 1/16W	
R111			RK73HB1J271J	CHIP R 270 J 1/16W	
R112			RK73HB1J180J	CHIP R 18 J 1/16W	
R113			RK73HB1J271J	CHIP R 270 J 1/16W	
R114			RK73HB1J101J	CHIP R 100 J 1/16W	
R115			RK73GB1J100J	CHIP R 10 J 1/16W	
R116			RK73HB1J104J	CHIP R 100K J 1/16W	
R117			RK73HB1J103J	CHIP R 10K J 1/16W	
R118			RK73HB1J104J	CHIP R 100K J 1/16W	
R119,120		*	RK73EB2HR22F	CHIP R 0.22 F 1/2W	
R121,122			RK73HH1J154D	CHIP R 150K D 1/1	
R123			RK73HB1J472J	CHIP R 4.7K J 1/16W	
R124			RK73HH1J154D	CHIP R 150K D 1/1	
R125			RK73GB1J103J	CHIP R 10K J 1/16W	
R126			RK73GB1J101J	CHIP R 100 J 1/16W	
R127-129			RK73HH1J154D	CHIP R 150K D 1/1	
R130			RK73HB1J333J	CHIP R 33K J 1/16W	
R131			RK73HB1J103J	CHIP R 10K J 1/16W	
R132			RK73FB2A3R3J	CHIP R 3.3 J 1/10W	
R133			RK73HB1J103J	CHIP R 10K J 1/16W	
R134			RK73HB1J105J	CHIP R 1.0M J 1/16W	
R135			RK73HB1J473J	CHIP R 47K J 1/16W	
R136			RK73HB1J184J	CHIP R 180K J 1/16W	
R137			RK73HB1J222J	CHIP R 2.2K J 1/16W	
R140			RK73GB1J271J	CHIP R 270 J 1/16W	
R142			RK73GB1J271J	CHIP R 270 J 1/16W	
R144			R92-1252-05	CHIP R 0 OHM J 1/16W	
R147			RK73HB1J183J	CHIP R 18K J 1/16W	
R149			RK73HB1J103J	CHIP R 10K J 1/16W	
R150			RK73GB1J272J	CHIP R 2.7K J 1/16W	
R152			RK73HB1J103J	CHIP R 10K J 1/16W	
R153			RK73HB1J474J	CHIP R 470K J 1/16W	
R156			RK73HB1J272J	CHIP R 2.7K J 1/16W	
R157			RK73HB1J333J	CHIP R 33K J 1/16W	
R158			R92-0670-05	CHIP R 0 OHM	
R159			RK73HB1J104J	CHIP R 100K J 1/16W	
R160			RK73HB1J473J	CHIP R 47K J 1/16W	
R201			RK73HB1J473J	CHIP R 47K J 1/16W	

PARTS LIST

TX-RX UNIT (X57-6820-XX)

Ref. No.	Address	New parts	Parts No.	Description			Destination
R202			RK73HB1J103J	CHIP R	10K	J 1/16W	
R203			RK73HH1J104D	CHIP R	100K	D 1/16W	
R204			RK73HH1J274D	CHIP R	270K	D 1/16W	
R205			RK73HB1J103J	CHIP R	10K	J 1/16W	
R207			RK73HB1J100J	CHIP R	10	J 1/16W	
R208			RK73HB1J473J	CHIP R	47K	J 1/16W	
R209			RK73HB1J105J	CHIP R	1.0M	J 1/16W	
R212,213			RK73HB1J103J	CHIP R	10K	J 1/16W	
R214			RK73HB1J121J	CHIP R	120	J 1/16W	
R215			RK73HB1J105J	CHIP R	1.0M	J 1/16W	
R216			RK73HB1J100J	CHIP R	10	J 1/16W	
R217			RK73HB1J473J	CHIP R	47K	J 1/16W	
R218			RK73HB1J122J	CHIP R	1.2K	J 1/16W	
R219			RK73HB1J330J	CHIP R	33	J 1/16W	
R220,221			RK73HB1J105J	CHIP R	1.0M	J 1/16W	
R222			RK73HB1J271J	CHIP R	270	J 1/16W	
R223			RK73HB1J220J	CHIP R	22	J 1/16W	
R224			RK73HB1J271J	CHIP R	270	J 1/16W	
R228			RK73HB1J271J	CHIP R	270	J 1/16W	
R229			RK73HB1J222J	CHIP R	2.2K	J 1/16W	
R231			RK73HB1J332J	CHIP R	3.3K	J 1/16W	
R233			RK73HB1J222J	CHIP R	2.2K	J 1/16W	
R234			RK73HB1J100J	CHIP R	10	J 1/16W	
R235			R92-0670-05	CHIP R	0 OHM		
R237			RK73HB1J681J	CHIP R	680	J 1/16W	
R238,239			RK73HB1J470J	CHIP R	47	J 1/16W	
R240			RK73HB1J221J	CHIP R	220	J 1/16W	
R241			R92-1252-05	CHIP R	0 OHM	J 1/16W	
R242			RK73HB1J822J	CHIP R	8.2K	J 1/16W	
R243			RK73HB1J684J	CHIP R	680K	J 1/16W	
R244			RK73HB1J470J	CHIP R	47	J 1/16W	
R247			RK73HB1J102J	CHIP R	1.0K	J 1/16W	
R249			RK73HB1J220J	CHIP R	22	J 1/16W	
R252			RK73HB1J154J	CHIP R	150K	J 1/16W	
R255			RK73HB1J153J	CHIP R	15K	J 1/16W	
R256			RK73HB1J563J	CHIP R	56K	J 1/16W	
R259			RK73HB1J272J	CHIP R	2.7K	J 1/16W	
R264			RK73HB1J470J	CHIP R	47	J 1/16W	
R265			RK73HH1J473D	CHIP R	47K	D 1/16W	
R266			RK73HH1J104D	CHIP R	100K	D 1/16W	
R268			RK73HB1J472J	CHIP R	4.7K	J 1/16W	
R269			RK73HB1J104J	CHIP R	100K	J 1/16W	
R272			R92-1368-05	CHIP R	0 OHM		
R274			RK73HB1J470J	CHIP R	47	J 1/16W	
R276			RK73HB1J220J	CHIP R	22	J 1/16W	
R278			RK73HB1J332J	CHIP R	3.3K	J 1/16W	
R279-282			RK73HB1J392J	CHIP R	3.9K	J 1/16W	
R285			R92-1368-05	CHIP R	0 OHM		
R288,289			RK73HB1J392J	CHIP R	3.9K	J 1/16W	
R294			R92-0670-05	CHIP R	0 OHM		
R295			RK73HB1J473J	CHIP R	47K	J 1/16W	
R303			RK73HB1J102J	CHIP R	1.0K	J 1/16W	
R306			RK73HB1J101J	CHIP R	100	J 1/16W	
R310		*	RK73HH1J184D	CHIP R	180K	D 1/16W	
R311			RK73HH1J473D	CHIP R	47K	D 1/16W	
R313-315			RK73HB1J100J	CHIP R	10	J 1/16W	
R316		*	RK73GB1J106J	CHIP R	10M	J 1/16W	
R318			RK73HB1J333J	CHIP R	33K	J 1/16W	
R319			RK73HB1J183J	CHIP R	18K	J 1/16W	
R321			RK73HB1J102J	CHIP R	1.0K	J 1/16W	

Ref. No.	Address	New parts	Parts No.	Description			Destination
R322			RK73HH1J563D	CHIP R	56K	D 1/16W	
R323			RK73HB1J182J	CHIP R	1.8K	J 1/16W	
R324			RK73HB1J103J	CHIP R	10K	J 1/16W	
R325			RK73HH1J104D	CHIP R	100K	D 1/16W	
R326			RK73HB1J104J	CHIP R	100K	J 1/16W	
R327			RK73HB1J222J	CHIP R	2.2K	J 1/16W	
R328,329			R92-1368-05	CHIP R	0 OHM		
R330			RK73HB1J474J	CHIP R	470K	J 1/16W	
R331			R92-1368-05	CHIP R	0 OHM		
R334			R92-1368-05	CHIP R	0 OHM		
R335			RK73HB1J152J	CHIP R	1.5K	J 1/16W	
R336			RK73HB1J560J	CHIP R	56	J 1/16W	
R337			RK73HB1J473J	CHIP R	47K	J 1/16W	
R338			RK73HB1J474J	CHIP R	470K	J 1/16W	
R339			RK73HB1J220J	CHIP R	22	J 1/16W	
R340			RK73HB1J104J	CHIP R	100K	J 1/16W	
R341			RK73HB1J221J	CHIP R	220	J 1/16W	
R342			RK73HB1J121J	CHIP R	120	J 1/16W	
R343			RK73HB1J101J	CHIP R	100	J 1/16W	
R344			RK73HB1J224J	CHIP R	220K	J 1/16W	
R345			RK73HB1J154J	CHIP R	150K	J 1/16W	
R346			RK73HB1J101J	CHIP R	100	J 1/16W	
R348			RK73HB1J102J	CHIP R	1.0K	J 1/16W	
R350			RK73HB1J822J	CHIP R	8.2K	J 1/16W	
R351			RK73HB1J103J	CHIP R	10K	J 1/16W	
R352			RK73HB1J681J	CHIP R	680	J 1/16W	
R353			RK73HB1J101J	CHIP R	100	J 1/16W	
R355,356			R92-1368-05	CHIP R	0 OHM		
R359			RK73HB1J561J	CHIP R	560	J 1/16W	
R360			RK73HB1J470J	CHIP R	47	J 1/16W	
R361			RK73HB1J473J	CHIP R	47K	J 1/16W	
R362			R92-1368-05	CHIP R	0 OHM		
R363			RK73HB1J332J	CHIP R	3.3K	J 1/16W	
R364			RK73HB1J104J	CHIP R	100K	J 1/16W	
R366			RK73HB1J105J	CHIP R	1.0M	J 1/16W	
R368			RK73HB1J102J	CHIP R	1.0K	J 1/16W	
R369			RK73HB1J471J	CHIP R	470	J 1/16W	
R371			RK73HB1J474J	CHIP R	470K	J 1/16W	
R401-405			RK73HB1J474J	CHIP R	470K	J 1/16W	
R406			RK73HB1J105J	CHIP R	1.0M	J 1/16W	
R407,408			RK73HB1J474J	CHIP R	470K	J 1/16W	
R409			R92-1368-05	CHIP R	0 OHM		
R410			RK73HB1J223J	CHIP R	22K	J 1/16W	
R411			RK73HH1J154D	CHIP R	150K	D 1/1	
R412			RK73HH1J104D	CHIP R	100K	D 1/16W	
R413			RK73HB1J103J	CHIP R	10K	J 1/16W	
R414			R92-1368-05	CHIP R	0 OHM		
R415			RK73HB1J223J	CHIP R	22K	J 1/16W	
R416,417			RK73HB1J474J	CHIP R	470K	J 1/16W	
R418			RK73HB1J333J	CHIP R	33K	J 1/16W	
R419			RK73HB1J394J	CHIP R	390K	J 1/16W	
R420			RK73HB1J474J	CHIP R	470K	J 1/16W	
R421			RK73HB1J224J	CHIP R	220K	J 1/16W	
R422			RK73HB1J223J	CHIP R	22K	J 1/16W	
R423			RK73HB1J471J	CHIP R	470	J 1/16W	
R424			RK73HB1J474J	CHIP R	470K	J 1/16W	
R425			RK73HB1J182J	CHIP R	1.8K	J 1/16W	
R426			RK73HB1J333J	CHIP R	33K	J 1/16W	
R427			R92-1368-05	CHIP R	0 OHM		
R428			RK73HB1J224J	CHIP R	220K	J 1/16W	

PARTS LIST

TX-RX UNIT (X57-6820-XX)

Ref. No.	Address	New parts	Parts No.	Description			Destination
R429			RK73HB1J474J	CHIP R	470K	J 1/16W	
R430			RK73HB1J333J	CHIP R	33K	J 1/16W	
R431			RK73HB1J474J	CHIP R	470K	J 1/16W	
R432			RK73HB1J124J	CHIP R	120K	J 1/16W	
R433			RK73HB1J100J	CHIP R	10	J 1/16W	
R434			RK73HB1J473J	CHIP R	47K	J 1/16W	
R435			RK73HB1J474J	CHIP R	470K	J 1/16W	
R436			RK73HB1J472J	CHIP R	4.7K	J 1/16W	
R437			RK73HB1J474J	CHIP R	470K	J 1/16W	
R438			RK73HB1J103J	CHIP R	10K	J 1/16W	
R440			RK73HB1J4R7J	CHIP R	4.7	J 1/16W	
R441			RK73HB1J224J	CHIP R	220K	J 1/16W	
R442			RK73HB1J472J	CHIP R	4.7K	J 1/16W	
R443			RK73HB1J220J	CHIP R	22	J 1/16W	
R444			RK73HB1J332J	CHIP R	3.3K	J 1/16W	
R445			R92-1368-05	CHIP R	0 OHM		
R446			RK73HB1J100J	CHIP R	10	J 1/16W	
R447			RK73HB1J472J	CHIP R	4.7K	J 1/16W	
R448			RK73HB1J104J	CHIP R	100K	J 1/16W	
R450,451			RK73HB1J473J	CHIP R	47K	J 1/16W	
R452			RK73HB1J683J	CHIP R	68K	J 1/16W	
R454			RK73HB1J473J	CHIP R	47K	J 1/16W	
R455			RK73HB1J184J	CHIP R	180K	J 1/16W	
R456			RK73HB1J473J	CHIP R	47K	J 1/16W	
R457			RK73HB1J102J	CHIP R	1K	J 1/16W	
R458			RK73HB1J333J	CHIP R	33K	J 1/16W	
R459			RK73HB1J474J	CHIP R	470K	J 1/16W	
R460			RK73HB1J473J	CHIP R	47K	J 1/16W	
R461			RK73HB1J333J	CHIP R	33K	J 1/16W	
R462			RK73HB1J124J	CHIP R	120K	J 1/16W	
R463			RK73HB1J473J	CHIP R	47K	J 1/16W	
R464			RK73HB1J223J	CHIP R	22K	J 1/16W	
R465			RK73HB1J393J	CHIP R	39K	J 1/16W	
R466,467			RK73HB1J333J	CHIP R	33K	J 1/16W	
R468			RK73HB1J154J	CHIP R	150K	J 1/16W	
R469			RK73HB1J472J	CHIP R	4.7K	J 1/16W	
R470			RK73HB1J124J	CHIP R	120K	J 1/16W	
R472			R92-1368-05	CHIP R	0 OHM		
R473			RK73HB1J474J	CHIP R	470K	J 1/16W	
R474			RK73HB1J393J	CHIP R	39K	J 1/16W	
R475			R92-1368-05	CHIP R	0 OHM		
R476			RK73HB1J100J	CHIP R	10	J 1/16W	
R477			R92-1368-05	CHIP R	0 OHM		
R478			RK73HB1J103J	CHIP R	10K	J 1/16W	
R479			RK73HB1J152J	CHIP R	1.5K	J 1/16W	
R480			RK73HB1J474J	CHIP R	470K	J 1/16W	
R481			RK73HB1J104J	CHIP R	100K	J 1/16W	
R483,484			RK73HB1J102J	CHIP R	1.0K	J 1/16W	
R486			RK73HB1J102J	CHIP R	1.0K	J 1/16W	
R488-490			RK73HB1J102J	CHIP R	1.0K	J 1/16W	
R491-498			RK73HB1J101J	CHIP R	100	J 1/16W	K2,K3
R499			RK73HB1J105J	CHIP R	1.0M	J 1/16W	
R500			R92-1368-05	CHIP R	0 OHM		
R501			RK73HB1J101J	CHIP R	100	J 1/16W	K2,K3
R502			RK73HB1J471J	CHIP R	470	J 1/16W	
R503			RK73HB1J101J	CHIP R	100	J 1/16W	K2,K3
R505			RK73HB1J102J	CHIP R	1.0K	J 1/16W	
R506			RK73HB1J104J	CHIP R	100K	J 1/16W	
R507			RK73HB1J102J	CHIP R	1.0K	J 1/16W	
R514			RK73GB1J103J	CHIP R	10K	J 1/16W	

Ref. No.	Address	New parts	Parts No.	Description			Destination
R515			RK73HB1J104J	CHIP R	100K	J 1/16W	
R516			RK73HB1J124J	CHIP R	120K	J 1/16W	
R517			RK73HB1J101J	CHIP R	100	J 1/16W	K2,K3
R518			R92-1368-05	CHIP R	0 OHM		
R519			RK73HB1J474J	CHIP R	470K	J 1/16W	
R520			R92-1368-05	CHIP R	0 OHM		
R521			RK73HB1J104J	CHIP R	100K	J 1/16W	
R522,523			RK73HB1J154J	CHIP R	150K	J 1/16W	
R524			RK73HB1J103J	CHIP R	10K	J 1/16W	
R525,526			RK73HB1J104J	CHIP R	100K	J 1/16W	
R527			RK73HB1J272J	CHIP R	2.7K	J 1/16W	
R528			RK73HB1J104J	CHIP R	100K	J 1/16W	
R530			R92-1368-05	CHIP R	0 OHM		
R533,534			RK73HB1J474J	CHIP R	470K	J 1/16W	
R535			R92-1368-05	CHIP R	0 OHM		
R536			RK73HB1J105J	CHIP R	1.0M	J 1/16W	
R537			RK73HB1J104J	CHIP R	100K	J 1/16W	
R539			RK73HB1J104J	CHIP R	100K	J 1/16W	
R540-548			RK73HB1J470J	CHIP R	47	J 1/16W	
R549-551			RK73HB1J105J	CHIP R	1.0M	J 1/16W	
R552			RK73HB1J103J	CHIP R	10K	J 1/16W	
R555,556			RK73HB1J102J	CHIP R	1.0K	J 1/16W	
R557			RK73HB1J104J	CHIP R	100K	J 1/16W	
R559			RK73HB1J100J	CHIP R	10	J 1/16W	
R561			R92-1368-05	CHIP R	0 OHM		
R565-568			RK73HB1J102J	CHIP R	1.0K	J 1/16W	
R570-573			RK73HB1J100J	CHIP R	10	J 1/16W	
R574,575			RK73HB1J474J	CHIP R	470K	J 1/16W	
R576,577			RK73HB1J100J	CHIP R	10	J 1/16W	
R578			R92-1368-05	CHIP R	0 OHM		
R579			RK73HB1J471J	CHIP R	470	J 1/16W	
R580			RK73HB1J474J	CHIP R	470K	J 1/16W	
R583			R92-1368-05	CHIP R	0 OHM		
R585			RK73HB1J471J	CHIP R	470	J 1/16W	
R586			RK73HB1J103J	CHIP R	10K	J 1/16W	
R587			RK73HB1J473J	CHIP R	47K	J 1/16W	
R588			RK73HB1J470J	CHIP R	47	J 1/16W	
R589			RK73HB1J103J	CHIP R	10K	J 1/16W	
R590			RK73HB1J473J	CHIP R	47K	J 1/16W	
R591			RK73HB1J470J	CHIP R	47	J 1/16W	
R594,595			RK73HB1J104J	CHIP R	100K	J 1/16W	
R602			RK73HB1J104J	CHIP R	100K	J 1/16W	
R603			RK73HB1J470J	CHIP R	47	J 1/16W	
R604			RK73HB1J272J	CHIP R	2.7K	J 1/16W	
R605			RK73HB1J333J	CHIP R	33K	J 1/16W	
R606			RK73HB1J102J	CHIP R	1.0K	J 1/16W	
R607			RK73HB1J681J	CHIP R	680	J 1/16W	
R608			RK73HB1J102J	CHIP R	1.0K	J 1/16W	
R609			RK73HB1J104J	CHIP R	100K	J 1/16W	
R612			RK73HB1J154J	CHIP R	150K	J 1/16W	
R613			RK73HB1J184J	CHIP R	180K	J 1/16W	
R614			RK73HB1J223J	CHIP R	22K	J 1/16W	
R616			RK73HB1J102J	CHIP R	1.0K	J 1/16W	
R617			RK73HB1J154J	CHIP R	150K	J 1/16W	
R618			RK73HB1J470J	CHIP R	47	J 1/16W	
R619			RK73HB1J273J	CHIP R	27K	J 1/16W	
R620,621			RK73HB1J223J	CHIP R	22K	J 1/16W	
R622			RK73HB1J473J	CHIP R	47K	J 1/16W	
R623			RK73HB1J223J	CHIP R	22K	J 1/16W	
R624			RK73HB1J182J	CHIP R	1.8K	J 1/16W	

PARTS LIST

TX-RX UNIT (X57-6820-XX)

Ref. No.	Address	New parts	Parts No.	Description	Destination
R626			RK73HB1J182J	CHIP R 1.8K J 1/16W	
R627,628			RK73HB1J473J	CHIP R 47K J 1/16W	
R631			RK73HB1J122J	CHIP R 1.2K J 1/16W	
R634,635			RK73HB1J105J	CHIP R 1.0M J 1/16W	
R637			RK73HB1J470J	CHIP R 47 J 1/16W	
R638			RK73HB1J222J	CHIP R 2.2K J 1/16W	
R640			RK73HB1J684J	CHIP R 680K J 1/16W	
R641			RK73HB1J105J	CHIP R 1.0M J 1/16W	
R643			RK73HB1J105J	CHIP R 1.0M J 1/16W	
R651			R92-1368-05	CHIP R 0 OHM	
R701-704			RK73HB1J102J	CHIP R 1.0K J 1/16W	K2
R701-716			RK73HB1J102J	CHIP R 1.0K J 1/16W	K3
R717,718			RK73HB1J474J	CHIP R 470K J 1/16W	
R719,720			RK73HB1J101J	CHIP R 100 J 1/16W	K2,K3
R721			RK73HB1J181J	CHIP R 180 J 1/16W	K2,K3
R722			RK73HB1J101J	CHIP R 100 J 1/16W	K3
R723			RK73HB1J181J	CHIP R 180 J 1/16W	K2,K3
R724			RK73HB1J101J	CHIP R 100 J 1/16W	K3
R727			RK73HB1J102J	CHIP R 1.0K J 1/16W	
R728-730			RK73HB1J474J	CHIP R 470K J 1/16W	
R731-733			RK73HB1J102J	CHIP R 1.0K J 1/16W	K
R731-735			RK73HB1J102J	CHIP R 1.0K J 1/16W	K2,K3
R735			RK73HB1J102J	CHIP R 1.0K J 1/16W	K
R736			RK73HB1J471J	CHIP R 470 J 1/16W	
R737			RK73HB1J474J	CHIP R 470K J 1/16W	
R738			RK73HB1J471J	CHIP R 470 J 1/16W	
R739			RK73HB1J474J	CHIP R 470K J 1/16W	K2,K3
R740			RK73HB1J222J	CHIP R 2.2K J 1/16W	K2,K3
R741-745			RK73HB1J102J	CHIP R 1.0K J 1/16W	
R747			RK73HB1J102J	CHIP R 1.0K J 1/16W	
R754			RK73HB1J474J	CHIP R 470K J 1/16W	K2,K3
R756			RK73HB1J181J	CHIP R 180 J 1/16W	K2,K3
R760-762			RK73HB1J102J	CHIP R 1.0K J 1/16W	K2,K3
R760,761			RK73HB1J102J	CHIP R 1.0K J 1/16W	K
R763			RK73HH1J333D	CHIP R 33K D 1/16W	K2,K3
R764			RK73HH1J104D	CHIP R 100K D 1/16W	K2,K3
R766			RK73HB1J223J	CHIP R 22K J 1/16W	K2,K3
R767			RK73HH1J223D	CHIP R 22K D 1/16W	K2,K3
R768			RK73HB1J223J	CHIP R 22K J 1/16W	K2,K3
R803			RK73GB1J2R2J	CHIP R 2.2 J 1/16W	
R804			R92-1368-05	CHIP R 0 OHM	
R805,806			RK73GB1J2R2J	CHIP R 2.2 J 1/16W	
R807			R92-1368-05	CHIP R 0 OHM	
R808			RK73GB1J4R7J	CHIP R 4.7 J 1/16W	
R812			RK73GB1J100J	CHIP R 10 J 1/16W	
R813			R92-1368-05	CHIP R 0 OHM	
R814			R92-1252-05	CHIP R 0 OHM J 1/16W	
R815			RK73HB1J103J	CHIP R 10K J 1/16W	
R817			RK73HB1J224J	CHIP R 220K J 1/16W	
R818			RK73HB1J334J	CHIP R 330K J 1/16W	
R819			RK73HB1J124J	CHIP R 120K J 1/16W	
R825			RK73HB1J154J	CHIP R 150K J 1/16W	
R826			RK73HB1J123J	CHIP R 12K J 1/16W	
R827			RK73HH1J334D	CHIP R 330K D 1/16W	
R828			RK73HH1J223D	CHIP R 22K D 1/16W	
S901		*	S64-0406-05	LEVER SWITCH	
S902		*	S70-0496-05	TACT SWITCH	
D1			MA2S111	DIODE	
D2 ,3			NNCD6.8G	ZENER DIODE	

Ref. No.	Address	New parts	Parts No.	Description	Destination
D4 -6		*	AVRM1005C270M	VARISTOR	
D13 ,14			MA2S111	DIODE	
D101			HVC131	DIODE	
D105			HZU5CLL	ZENER DIODE	
D106-109			HVC131	DIODE	
D110,111		*	EZJZ0V500AA	VARISTOR	
D202-209			1SV273	VARIABLE CAPACITANCE DIODE	
D210			HVC131	DIODE	
D303,304			HVC376B	VARIABLE CAPACITANCE DIODE	
D306-311			1SV282	VARIABLE CAPACITANCE DIODE	
D312			1SV278	VARIABLE CAPACITANCE DIODE	
D313			MA2S111	DIODE	
D314			DA221	DIODE	
D401			1SR154-400	DIODE	
D402-404			RB706F-40	DIODE	
D405			1SS388	DIODE	
D604			NNCD6.8G	ZENER DIODE	
D608,609			1SS388	DIODE	
D701-704			IMN10	DIODE	K3
D701,702			IMN10	DIODE	K2
D717-719			IMN10	DIODE	K3
D718,719			IMN10	DIODE	K,K2
D720			DTZ3.9(B)	ZENER DIODE	K2,K3
D801			1SS301	DIODE	
D802			HRB0502A	DIODE	
D803,804			DA221	DIODE	
D805		*	CUS01	DIODE	
IC1			RV5C386A	MOS-IC	
IC2		*	AT2425610TI27	ROM IC	
IC3			S-80930CNNBG80	MOS-IC	
IC4		*	MM1522XURE	ANALOGUE IC	
IC5		*	30625MGP193GP	MICROPROCESSOR IC	
IC6		*	29LV160BE90PBT	ROM IC	
IC7		*	TC7W08FK	MOS-IC	
IC8		*	320VC5416GGU12	MICROPROCESSOR IC	
IC9			TC74VHCT244AFT	MOS-IC	
IC10			TC7W53FK	HYBRID IC	
IC11			BU4094BCFV	MOS-IC	
IC12		*	TC7WH74FK	MOS-IC	
IC13		*	EX128TQ64I	MOS-IC	
IC14		*	TC7WU04FK	MOS-IC	
IC101			TA75W01FU	MOS-IC	
IC102,103		*	MASWSS0006	ANALOGUE IC	
IC104			TC75W51FK	MOS-IC	
IC201			LMC7101BIM5	MOS-IC	
IC202			SPM5001	MOS-IC	
IC203			TC7W53FK	HYBRID IC	
IC204			TA31137FN	MOS-IC	
IC205-207			TC7W53FK	HYBRID IC	
IC208		*	TC7WU04FK	MOS-IC	
IC301			LMC7101BIM5	MOS-IC	
IC303			ADF4111BCP7	MOS-IC	
IC304		*	UPB1511TB	BI-POLAR IC	
IC401		*	XC6204B502PR	MOS-IC	
IC402			XC6204B502MR	MOS-IC	
IC403			TC75W51FK	MOS-IC	
IC404			TC7W66FK	MOS-IC	
IC405			TC75W51FK	MOS-IC	
IC406			AK4550VT	MOS-IC	

PARTS LIST

TX-RX UNIT (X57-6820-XX)

Ref. No.	Address	New parts	Parts No.	Description	Destination
IC407			TC75W51FK	MOS-IC	
IC408			TC7W66FK	MOS-IC	
IC409			TC75W51FK	MOS-IC	
IC411			M62364FP	MOS-IC	
IC412			TC75W51FK	MOS-IC	
IC413			TC7W53FK	HYBRID IC	
IC414		*	MCP41100T	ANALOGUE IC	
IC415		*	TC7MB3245FK	MOS-IC	
IC416,417		*	TC7WB125FK	MOS-IC	
IC501,502		*	TC7SBD384AFU	MOS-IC	
IC601,602		*	LM4906LD	ANALOGUE IC	
IC603			TC75W51FK	MOS-IC	
IC604			TC7W66FK	MOS-IC	
IC606		*	XC6201P302MR	MOS-IC	
IC701-703			BU4094BCF	MOS-IC	
IC704			LMC7101BIM5	MOS-IC	K2,K3
IC801,802			XC6204B332M	MOS-IC	
IC803		*	XC6209B152M	MOS-IC	
IC804			XC61CC5602NR	MOS-IC	
IC805			XC6365D103M	MOS-IC	
IC806			XC6204B252M	MOS-IC	
IC807			TK11250CUCB	MOS-IC	
IC808		*	XC9101D09AKR	ANALOGUE IC	
Q1		*	UM6K1N	FET	
Q101			2SC5108(Y)	TRANSISTOR	
Q102			2SC5192	TRANSISTOR	
Q103		*	RD01MUS1	FET	
Q104			SSM3K15TE	FET	
Q105			RD07MVS1	FET	
Q106			DTA144EE	DIGITAL TRANSISTOR	
Q107			SSM3K15TE	FET	
Q110			2SJ243	FET	
Q111		*	EMD9	TRANSISTOR	
Q201			2SC4617(S)	TRANSISTOR	
Q202			3SK274*J	FET	
Q204			2SK1215(E)	FET	
Q205			2SC5108(Y)	TRANSISTOR	
Q209		*	EMD9	TRANSISTOR	
Q306			2SK879(GR,Y)	FET	
Q307			2SC4617(S)	TRANSISTOR	
Q308		*	SSM6L05FU	FET	
Q309			2SJ347	FET	
Q310,311			2SK508NV(K52)	FET	
Q312-314			2SC5108(Y)	TRANSISTOR	
Q315			2SC4617(S)	TRANSISTOR	
Q316		*	SSM6L05FU	FET	
Q401,402		*	SSM6L05FU	FET	
Q403			TPC6102	FET	
Q404			2SC4738(GR)	TRANSISTOR	
Q405			2SA1832(GR)	TRANSISTOR	
Q406			SSM3K15TE	FET	
Q407			2SJ347	FET	
Q408,409			SSM3K15TE	FET	
Q410			2SJ347	FET	
Q411			SSM3K15TE	FET	
Q412			2SC4617(S)	TRANSISTOR	
Q415		*	SSM6L05FU	FET	
Q416-418			SSM3K15TE	FET	
Q420		*	SSM6L05FU	FET	

Ref. No.	Address	New parts	Parts No.	Description	Destination
Q601			SSM3K15TE	FET	
Q605			UMG3N	TRANSISTOR	
Q606			SSM3K15TE	FET	
Q607			UMC4N	TRANSISTOR	
Q608			2SB798(DL,DK)	TRANSISTOR	
Q609			2SJ243	FET	
Q610			SSM3K15TE	FET	
Q611			2SJ243	FET	
Q612			SSM3K15TE	FET	
Q702			SSM3K15TE	FET	
Q703,704		*	SSM6L05FU	FET	
Q705			2SC4617(S)	TRANSISTOR	K2,K3
Q706			2SB798(DL,DK)	TRANSISTOR	K2,K3
Q801			TPC6102	FET	
Q802		*	SSM5H01TU	FET	
TH101			B57331V2104J	THERMISTOR	

EXPLODED VIEW (TK-5210 K)

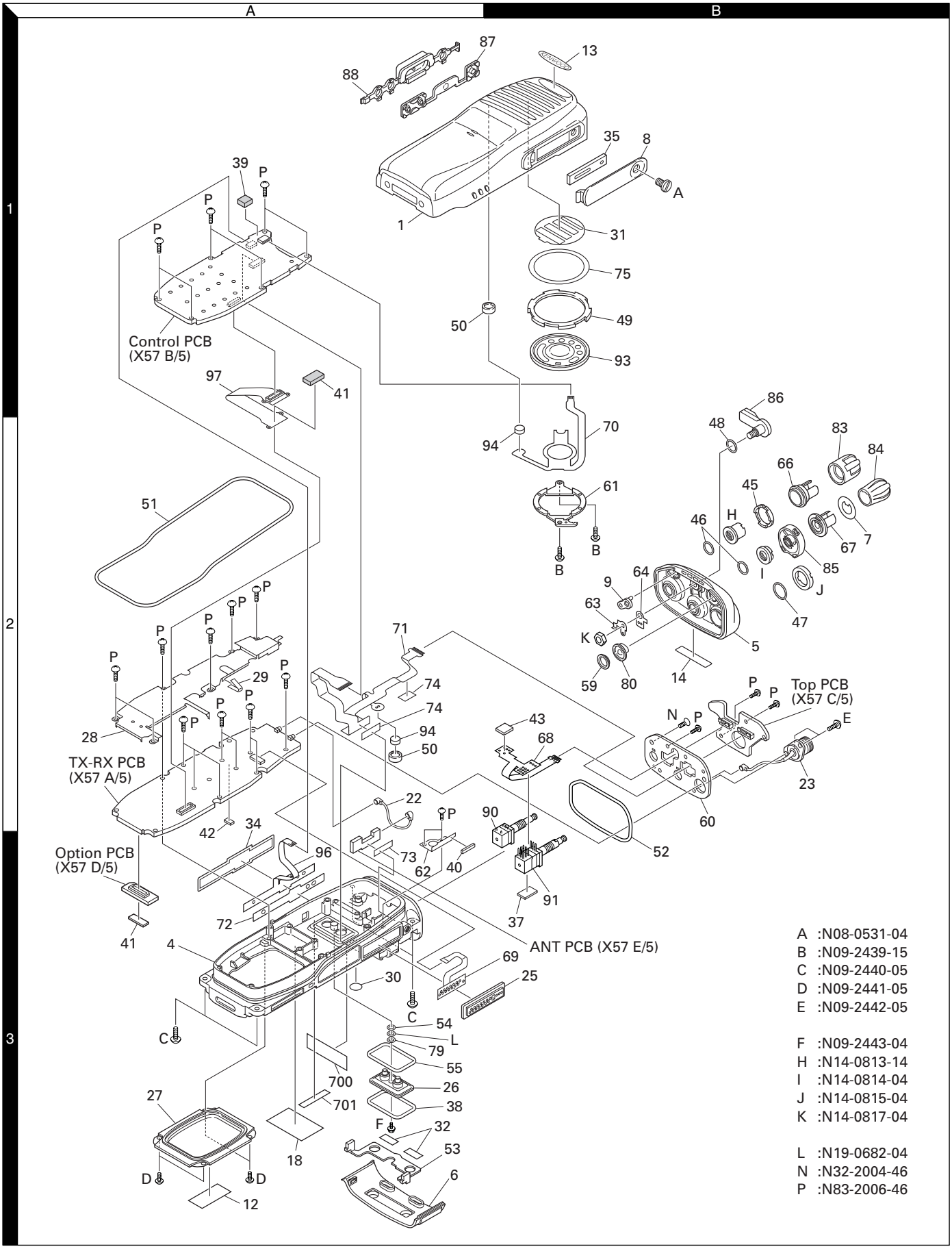

A :N08-0531-04
B :N09-2439-15
C :N09-2440-05
D :N09-2441-05
E :N09-2442-05

F :N09-2443-04
H :N14-0813-14
I :N14-0814-04
J :N14-0815-04
K :N14-0817-04

L :N19-0682-04
N :N32-2004-46
P :N83-2006-46

Parts with the exploded numbers larger than 700 are not supplied.

EXPLODED VIEW (TK-5210 K2, K3)

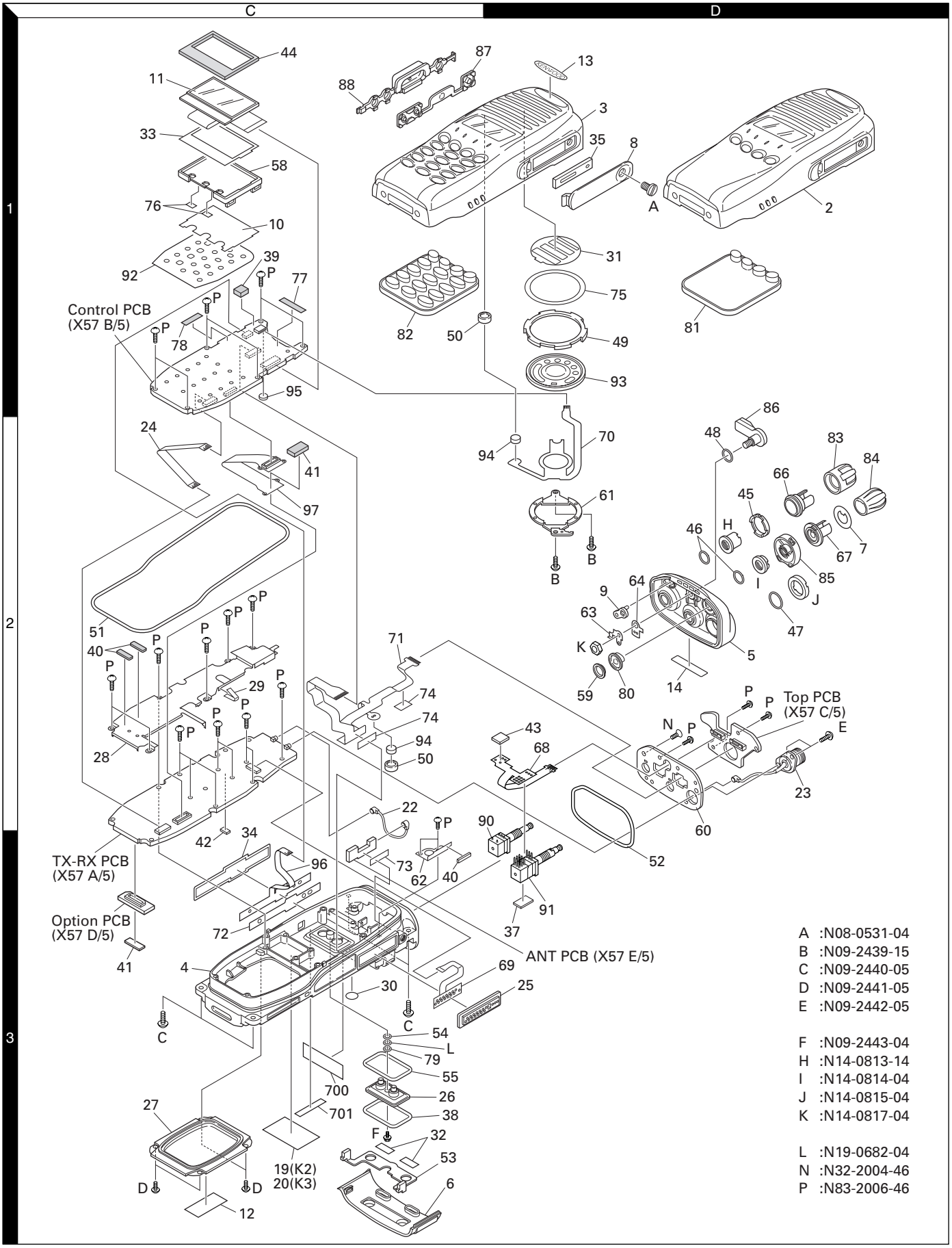

A :N08-0531-04
B :N09-2439-15
C :N09-2440-05
D :N09-2441-05
E :N09-2442-05

F :N09-2443-04
H :N14-0813-14
I :N14-0814-04
J :N14-0815-04
K :N14-0817-04

L :N19-0682-04
N :N32-2004-46
P :N83-2006-46

 Parts with the exploded numbers larger than 700 are not supplied.

PACKING

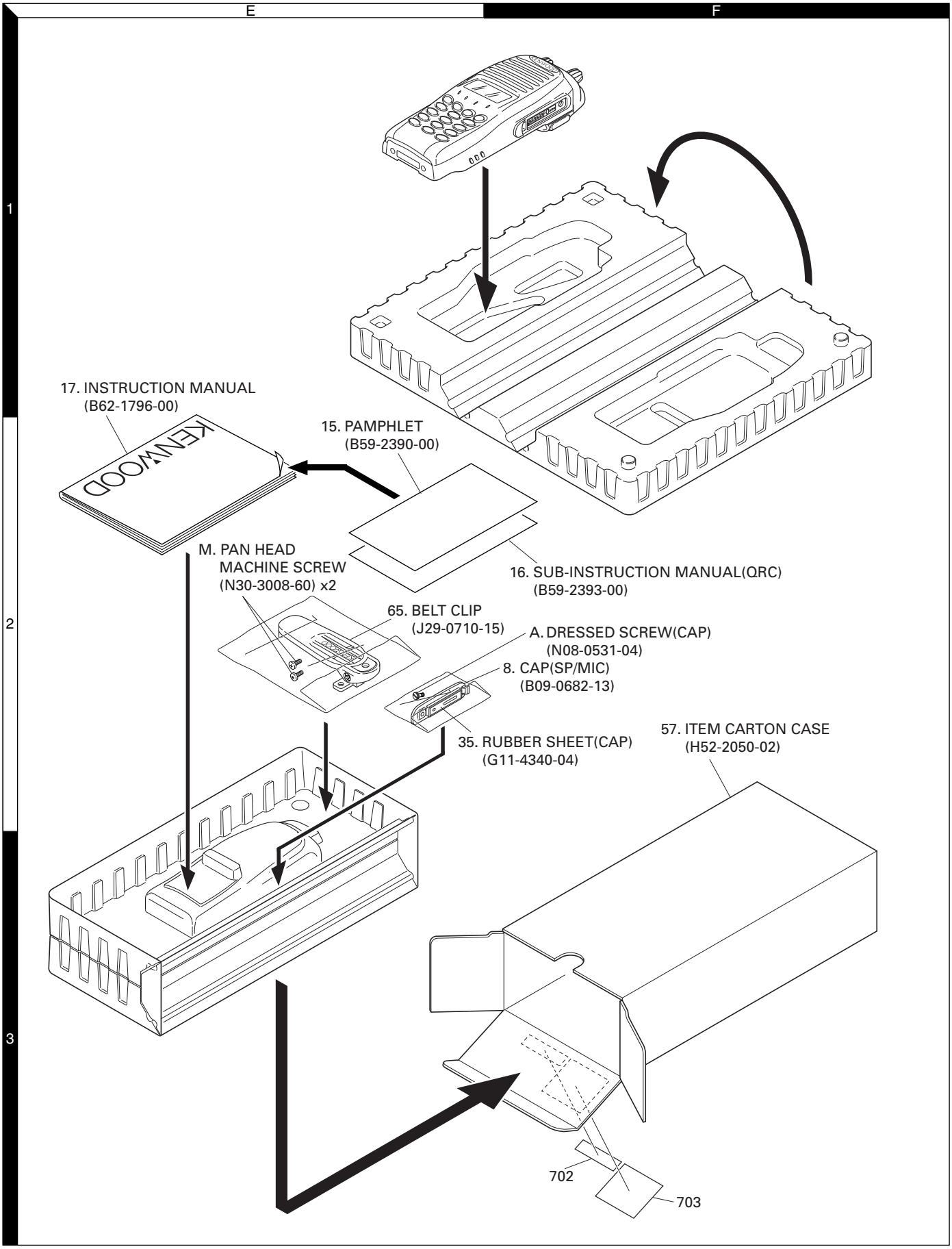

Parts with the exploded numbers larger than 700 are not supplied.

ADJUSTMENT

Cotrols

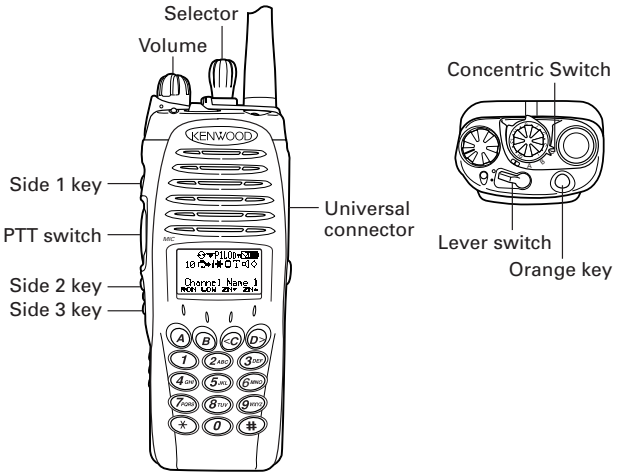

Panel Test Mode (K2 and K3 models only)

For the K model (without LCD), perform "Test mode" using the KPG-95D.

■ Test mode operation features

This transceiver has a test mode. **To enter panel test mode, press and hold the [Side3] and [PTT] keys while turning the transceiver power on and then the [PTT] key first.** Test mode can be inhibited by programming. To exit test mode, switch the power on again.

- When the panel test mode is activated, the channel selected with the [Selector] knob and the last used signaling number are displayed. When it is activated for the first time, the signaling number is 1.
- If test signaling 20 (Tone Test Pattern) is selected, the result of Bit Error Rate (BER) calculation is shown on the transceiver LCD. The BER value is also output from the serial port.
- The APCO and analog modes are switched automatically by selecting test signaling. When APCO mode is effective, “A” is displayed on the LCD.

• Key operation

Key	Function	Display
[Selector]	Test frequency channel up/down	Channel No.
[Concentric switch]	Channel spacing switching (Position "A":Wide, Position "B":Narrow, Position "C":APCO)	Wide :"W" Narrow :"N" APCO :"A"
[Lever switch]	RF output power switching (○:Low power, ●:High power)	Low power :"LO" High power :"HI"
[PTT]	Transmit	-
[Side1]	Squelch level change (0→1→2→•••→9→0→1→2→•••)	Squelch level 0:"SQ.LV0" Squelch level 1:"SQ.LV1" Squelch level 9:"SQ.LV9"
[Side1] Hold	Squelch off	
[Side2]	MSK baud rate change (1200bps/2400bps)	2400bps: icon appears
[Side2] Hold	Compander on/off	On: icon appears
[Side3]	Shifts to the Panel tuning mode	-
[Side3] Hold	LCD all lights	LCD all point appears
[Orange]	Beat shift on/off	On: icon appears
[A]	Unused	-
[B]	Unused	-
[C]	Test signaling down	Signaling No.
[D]	Test signaling up	Signaling No.
[0] to [9] and [#], [*]	Use as the DTMF keypad. If a key is pressed during transmission, the DTMF corresponding to the key that was presses is sent.	-

• LED indicator

Red LED — Lights during transmission. Blinks at the low battery voltage warning.

Green LED — Lights when there is carrier.

• LCD display in the panel test mode

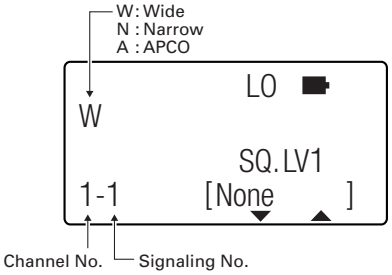

• Filter Mode

Display	Condition	Key
W	WIDE (25kHz) Filter	Concentric switch "A"
N	NARROW (12.5kHz) Filter	Concentric switch "B"
A	APCO (12.5kHz) Filter	Concentric switch "C"

ADJUSTMENT

■ Frequency and Signaling

The transceiver has been adjusted for the frequencies shown in the following table. When required, readjust them following the adjustment procedure to obtain the frequencies you want in actual operation.

• Test Frequency (MHz)

Channel No.	RX Frequency	TX Frequency
1	155.10000	155.00000
2	136.10000	136.00000
3	173.90000	173.95000
4	155.00000	155.00000
5	155.20000	155.20000
6	155.40000	155.40000
7~16	-	-

• Test Signaling

Signaling No.	RX Signaling	TX Signaling	APCO/ Analog
1	None	None	Analog
2	None	100Hz Square wave	Analog
3	QT 67.0Hz	QT 67.0Hz	Analog
4	QT 151.4Hz	QT 151.4Hz	Analog
5	QT 210.7Hz	QT 210.7Hz	Analog
6	QT 254.1Hz	QT 254.1Hz	Analog
7	DQT 023N	DQT 023N	Analog
8	DQT 445N	DQT 445N	Analog
9	DQT 754I	DQT 754I	Analog
10	DTMF Code "159D"	DTMF Code "159D"	Analog
11	None	DTMF Code "9"	Analog
12	None	1633Hz Single Tone	Analog
13	2-Tone: A : 304.7Hz B : 3106.0Hz	2-Tone: A : 304.7Hz B : 3106.0Hz	Analog
14	Single Tone : 979.9Hz	Single Tone : 979.9Hz	Analog
15	None	MSK PN Pattern	Analog
16	MSK Sync : 0x052B Data : 0x230960C6AAAA CRC : 0xC4D7	MSK Sync : 0x052B Data : 0x230960C6AAAA CRC : 0xC4D7	Analog
17	NAC 293	NAC 293	APCO
18	NAC 023	NAC 023	APCO
19	NAC 5EA	NAC 5EA	APCO
20	1011Hz Tone Test Pattern	1011Hz Tone Test Pattern	APCO
21	NAC 293	Silence Pattern	APCO
22	NAC 293	Calibration Pattern	APCO
23	NAC 293	Transmitter Test Pattern	APCO
24	NAC 293	Symbol Rate Pattern	APCO
25	NAC 293	Low Deviation Pattern	APCO
26	NAC 293	Fidelity Pattern	APCO

Panel Tuning Mode (K2 and K3 models only)

The transceiver is adjusted in this mode.

For the K model (without LCD), perform "Tuning mode" using the KPG-95D.

■ Preparations for tuning the transceiver

Before attempting to tune the transceiver, connect the unit to a suitable power supply.

Whenever the transmitter is turned, the unit must be connected to a suitable dummy load (i.e. power meter).

The speaker output connector must be terminated with a 8Ω dummy load and connected to an AC voltmeter and an audio distortion meter or a SINAD measurement meter at all times during tuning.

■ To enter the Panel Tuning Mode

Press the [Side3] key in the panel test mode.

Use the [B] key to write tuning data through tuning modes, and the [C] and [D] keys to adjust tuning requirements (1 to 256 appeares on LCD).

Use the [A] key to select the adjustment item through tuning modes. Use the [Side1] key to adjust 3 or 5 reference level adjustments, and use the [Concentric switch] to switch between Wide/Narrow/APCO. (Position "A":Wide, Position "B":Narrow, Position "C":APCO)

• LCD display in the panel tuning mode

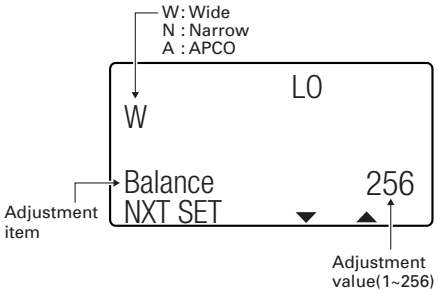

ADJUSTMENT

- **Key operation**

Key	Function
[Selector]	Test frequency channel up/down
[Concentric switch]	Channel spacing switching (Position "A": Wide, Position "B": Narrow, Position "C": APCO)
[Lever switch]	Unused
[PTT]	Transmission. When the battery low voltage is adjusted, the adjustment value is displayed on the LCD.
[Side1]	To enter 3 or 5 reference level adjustments
[Side2]	Unused
[Side3]	Exit the panel tuning mode and shift to the panel test mode.
[Orange]	Unused
[A]	Go to the next adjustment item (The current adjustment data is cleared.)
[A] Hold	Back to the last adjustment item (The current adjustment data is cleared.)
[B]	Write the new adjustment value to the transceiver.
[C]	Adjustment value down
[D]	Adjustment value up

- **3 or 5 reference level adjustments frequency**

Tuning point	Display	RX (MHz)	TX (MHz)
Low	L	136.10000	136.00000
Low'	LC	145.60000	145.50000
Center	C	155.10000	155.00000
High	CH	164.60000	164.50000
High '	H	173.90000	173.95000

- **Adjustment item and Display (***: 1~256)**

No.	Adjustment item	Display	Wide/Narrow/APCO	Tuning point	Note
1	RX assist voltage	RX V Assist ***	-	5	
2	TX assist voltage	TX V Assist ***	-	5	
3	RX front-end	RX Front-end ***	-	5	AF unmute
4	2nd local frequency	2nd Lo Freq ***	-	1	
5	Frequency	Frequency ***	-	1	
6	High power	High Power ***	-	5	
7	Low power	Low Power ***	-	3	
8	Mic sensitivity	Mic Sense ***	-	1	
9	Balance	Balance ***	Wide/Narrow/APCO	W:5/N:1/A:1	100Hz Square Wave
10	FM maximum deviation	FM Max Dev ***	Wide/Narrow	W:5/N:1	
11	APCO High deviation	APCO Hi Dev ***	APCO	5	Symbol Rate Pattern
12	QT deviation	QT Dev ***	Wide/Narrow	W:5/N:1	QT : 67Hz
13	DQT deviation	DQT Dev ***	Wide/Narrow	W:5/N:1	DQT : 023N
14	DTMF deviation	DTMF Dev ***	Wide/Narrow	W:1/N:1	DTMF Code : 9
15	Single tone deviation	Tone Dev ***	Wide/Narrow	W:1/N:1	Single Tone : 1633Hz
16	MSK deviation	MSK Dev ***	Wide/Narrow	W:1/N:1	MSK PN Pattern
17	Squelch (Threshold:1)	Squelch (1) ***	Wide/Narrow	W:3/N:1	AF unmute
18	Squelch (Tight:9)	Squelch (9) ***	Wide/Narrow	W:3/N:1	AF unmute
19	RSSI (Reference)	RSSI (Ref) ***	-	3	
20	RSSI (-120dBm)	RSSI (-120) ***	-	3	
21	RSSI (-70dBm)	RSSI (-70) ***	-	3	
22	Battery TX inhibit voltage	Battery ***	-	1	

ADJUSTMENT

■ Flow Chart

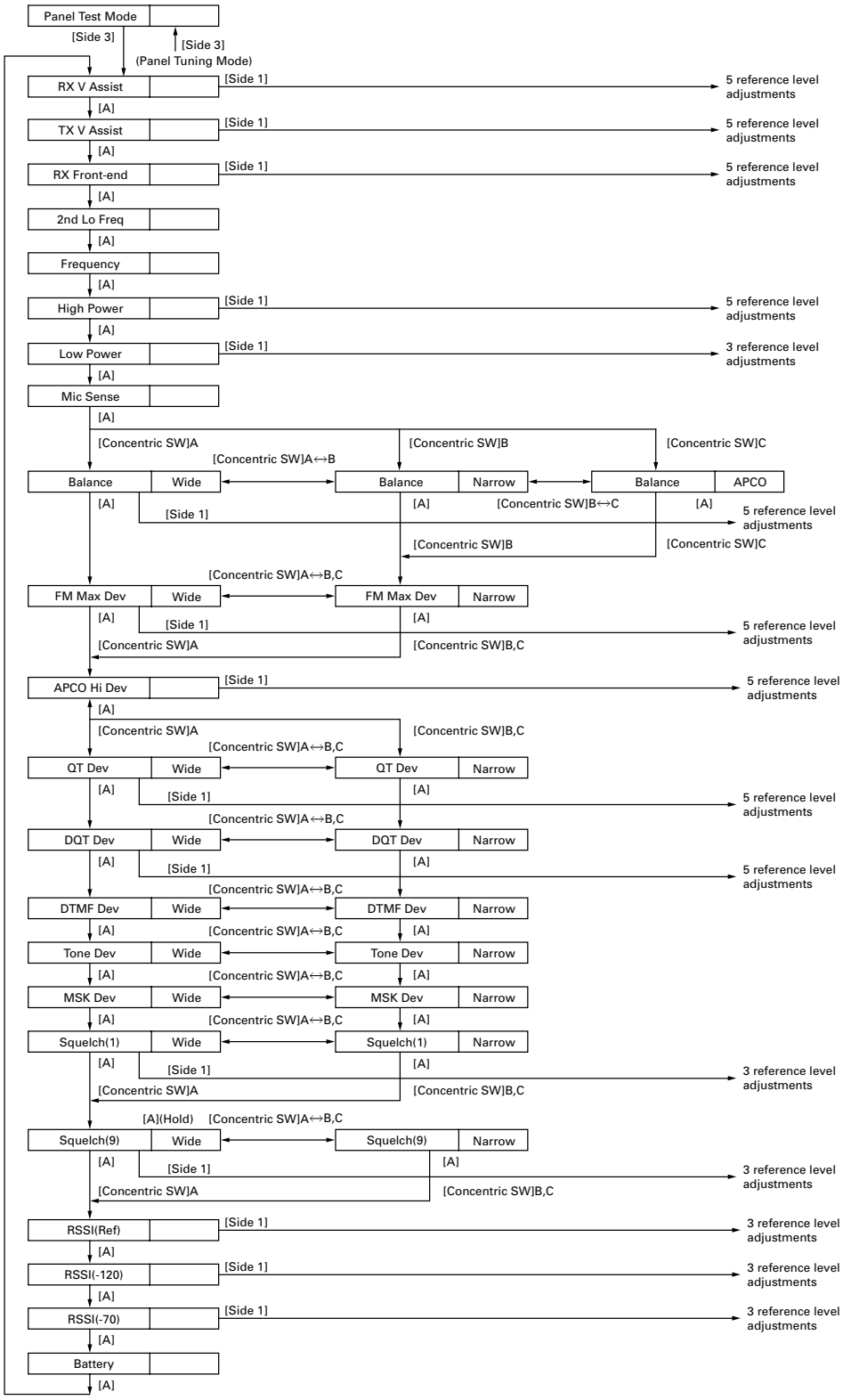

ADJUSTMENT

BER (Bit Error Rate) Measurement

1. The Panel Test Mode is used to measure the BER (Refer to "Test mode operation features" described on page 40.).
2. Select ”20” for test signaling (Refer to "Test Signaling" described on page 41.).
   When "20" is selected for the test signaling, the filter is automatically selected to "APCO".
   (If there is no RF input signal, the display shows ”500000”)
3. Select a filter (Refer to "Filter Mode" described on page 40.).
4. Select a test frequency (Refer to "Test Frequency" described on page 41.).

5. Measure the BER (Bit Error Rate) using the digital radio tester. Enter a standard input signal into the transceiver as a standard tone test pattern.
6. Adjust the input signal level to achieve the standard bit error rate (BER).
   (For example, if the BER is 5%, the display shows ”050000”.)

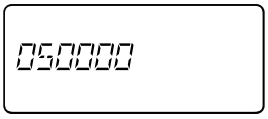

C4FM (APCO) Deviation Adjustment

1. The TK-5210 adjusts the deviation between High Deviation ±1800Hz for the C4FM (APCO).
2. The Symbol Rate Pattern is used when adjusting the High Deviation for the C4FM (APCO) (Refer to "Test Signaling" described on page 41.). This test signal has a peak deviation equal to π/2 1800Hz = 2827Hz.

Service Jig

■ Nut wrench

In order to turn the volume nut and the channel selector nut, use a recommendation tool.
KENWOOD part : W05-1123-00

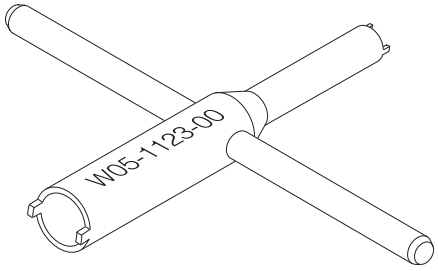

Adjustment Points

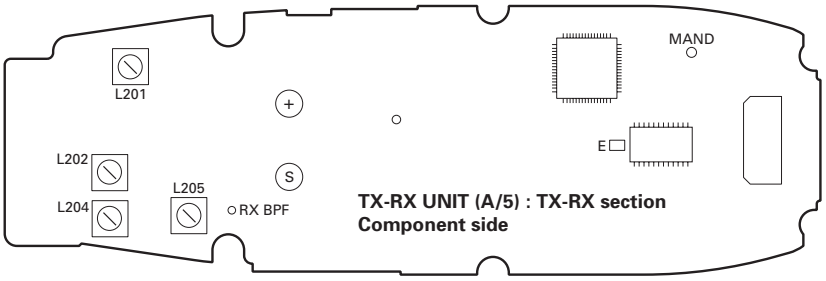

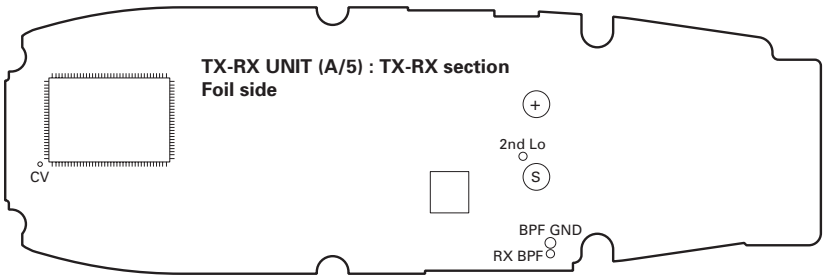

ADJUSTMENT

Test Equipment Required for Alignment

Test Equipment	Major Specifications	
1. Standard Signal Generator (SSG)	Frequency Range Modulation Output	136 to 174MHz Frequency modulation and external modulation -127dBm/0.1µV to greater than -47dBm/1mV
2. Power Meter	Input Impedance Operation Frequency Measurement Range	50Ω 136 to 174MHz Vicinity of 10W
3. Deviation Meter	Frequency Range	136 to 174MHz
4. Digital Volt Meter (DVM)	Measuring Range Input Impedance	10mV to 10V DC High input impedance for minimum circuit loading
5. Oscilloscope		DC through 30MHz
6. High Sensitivity Frequency Counter	Frequency Range Frequency Stability	10Hz to 1000MHz 0.2ppm or less
7. Ammeter		5A
8. AF Volt Meter (AF VTVM)	Frequency Range Voltage Range	50Hz to 10kHz 1mV to 10V
9. Audio Generator (AG)	Frequency Range Output	50Hz to 5kHz or more 0 to 1V
10. Distortion Meter	Capability Input Level	3% or less at 1kHz 50mV to 10Vrms
11. Spectrum Analyzer	Measuring Range	DC to 1GHz or more
12. Tracking Generator	Center frequency Output Voltage	50kHz to 600MHz 100mV or more
13. 8Ω Dummy Load		Approx. 8Ω, 3W
14. Regulated Power Supply		5V to 10V, approx. 3A Useful if ammeter equipped

■ The following parts are required for adjustment

1. Antenna connector adapter

The antenna connector of this transceiver uses an SMA terminal.

Use an antenna connector adapter [SMA(f) – BNC(f) or SMA(f) – N(f)] for adjustment. (The adapter is not provided as an option, so buy a commercially-available one.)

Note :

When the antenna connector adapter touches the knob, draw out the knob to mount the connector.

2. Universal connector

Use the interface cable (KPG-36) for PC tuning or the lead wire with plug (E30-3287-18) and screw (N08-0535-08) for panel tuning. Connect the plug to the universal connector of the transceiver and tighten the screw.

The lead wire with plug (E30-3287-18) and screw (N08-0535-08) terminals are as follows. Numbers are universal connector terminal numbers.

Caution

1. When connecting the plug to the universal connector of the transceiver, a short circuit may occur. To provent this, be sure to turn the transceiver POWER switch off.
2. Since the RX AF output is a BTL output, there is a DC component. Isolate this with a capacitor or transformer as shown in the figure.
3. Do not connct an instrument between red or black and GND.

- **Universal connector**

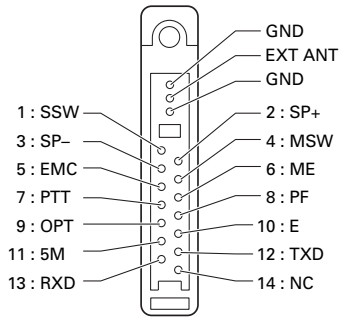

ADJUSTMENT

- **Panel tuning**

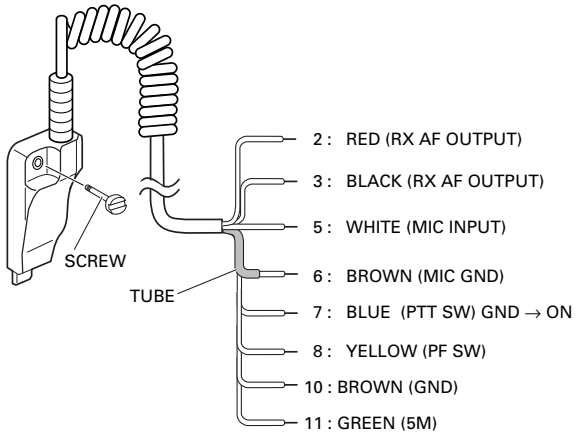

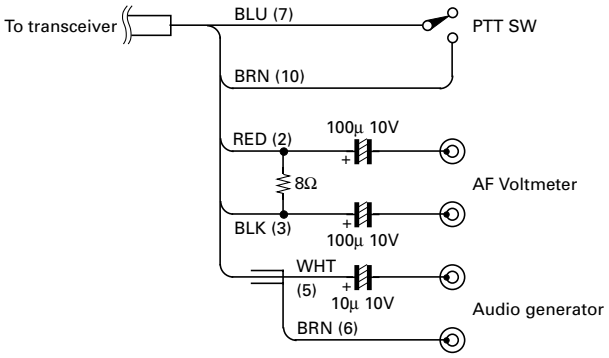

- **PC tuning**

Connect the wires to the PCB in the connector case of interface cable.

For output the wires out of the connector case, need to process the connector case.

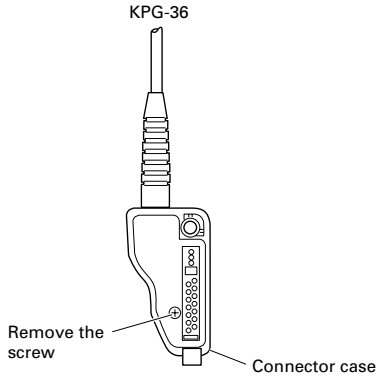

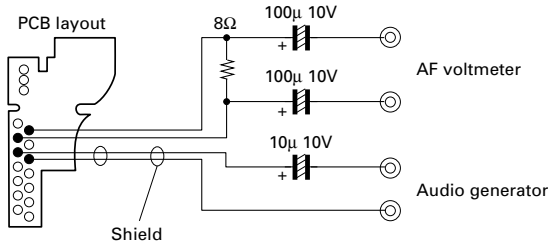

How to Remove the Flat Cable

1. Gently draw out both sides of the connector lever uniformly in the direction of the arrow with tweezers.
   (CN7, CN19, CN604, CN751, CN752, CN753)
   CN19, CN604, CN751: K2 and K3 models only

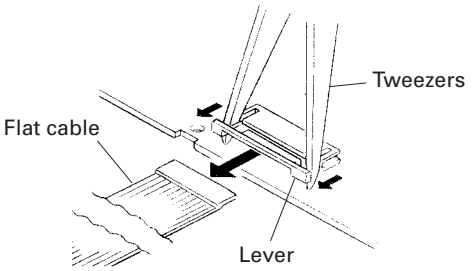

2. Gently rise up the connector lever in the direction of the arrow with a flat-head screwdriver or tweezers.
   (CN603)

Note : Gently push both sides of the connector lever, when put in the flat cable.

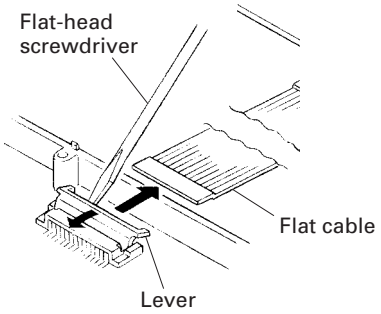

3. Gently depress the connector lever in the direction of the arrow with a flat-head screwdriver or tweezers.
   (CN902, CN903)

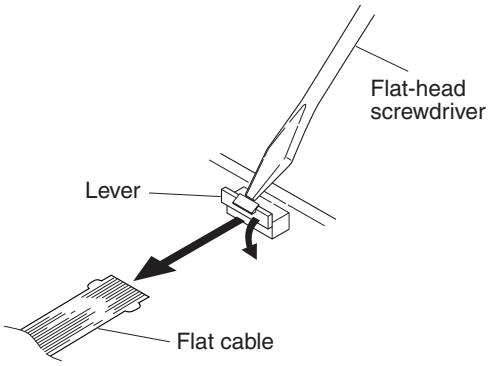

ADJUSTMENT

Common Section

Item	Condition	Measurement			Adjustment			Specifications/Remarks
		Test-equipment	Unit	Terminal	Unit	Parts	Method	
1. Setting	1) BATT terminal voltage:7.5V 2) SSG standard modulation [Wide] MOD:1kHz,DEV:3kHz [Narrow] MOD:1kHz,DEV:1.5kHz							
2. Assist voltage •RX	**[Panel tuning mode]** 1) Adj item:[RX V Assist] Adjust:[***] 2) Adj item:[L RX V Assist]→[LC RX V Assist]→[C RX V Assist]→[CH RX V Assist]→[H RX V Assist] Adjust:[***] Press [B] to store the adjustment value after adjustment.	Power meter DVM	Panel TX-RX (A/5)	ANT CV	Panel	[C],[D]	Change the adjustment value within the limit of the specified voltage.	1.88V±0.1V When adjustihg the assist voltage in PC tuning mode, slide the bar to indicate "VCO Lock Voltage" within 2.0V±0.1V on Meter window.
•TX	3) Adj item:[TX V Assist] Adjust:[***] 4) Adj item:[L TX V Assist]→[LC TX V Assist]→[C TX V Assist]→[CH TX V Assist]→[H TX V Assist] Adjust:[***] PTT:ON Press [B] to store the adjustment value after adjustment.							
3. RX Front-end adjust	1) Adj item:[RX Front-end] Adjust:[***] 2) Adj item:[L RX Front-end] Spectrum analyzer setting Center-f :136.1MHz Span :100MHz RBW :300kHz VBW :100kHz SWP :50ms TG level :-30dBm XdB/div :10dB Press [B] to store the adjustment value after adjustment.	Spectrum analyzer Tracking generator	Panel TX-RX (A/5)	ANT RX BPF BPF GND	TX-RX (A/5)	L201	After setting the adjustment value to 245, adjust coil to get the waveform as shown to the right.	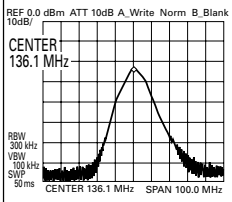
	3) Adj item:[H RX Front-end] Spectrum analyzer setting Center-f:173.9MHz Press [B] to store the adjustment value after adjustment.					L202 L204 L205	After setting the adjustment value to 90, adjust each coil to get the highest peak points. Furthermore, change the adjustment values to get the waveform as shown to the right.	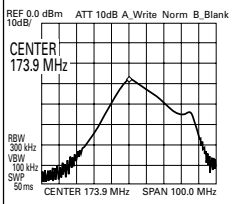
	4) Adj item:[LC RX Front-end] Spectrum analyzer setting Center-f:145.6MHz Press [B] to store the adjustment value after adjustment.				Panel	[C],[D]	Change the adjustment values to get the waveform as shown to the right.	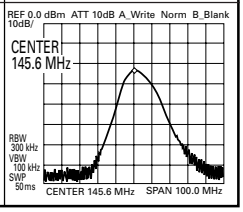

ADJUSTMENT

Item	Condition	Measurement			Adjustment			Specifications/Remarks
		Test-equipment	Unit	Terminal	Unit	Parts	Method	
	5) Adj item:[C RX Front-end] Spectrum analyzer setting Center-f:155.1MHz Press [B] to store the adjustment value after adjustment.	Spectrum analyzer	Panel TX-RX (A/5)	ANT RX BPF BPF GND	Panel	[C],[D]	Change the adjustment values to get the waveform as shown to the right.	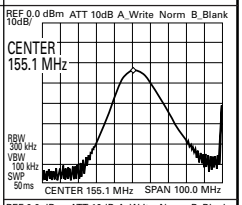
	6) Adj item:[CH RX Front-end] Spectrum analyzer setting Center-f:164.5MHz Press [B] to store the adjustment value after adjustment.							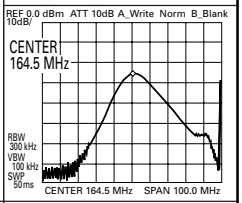
4. 2nd local adjust	1) Adj item:[2nd Lo Freq] Adjust:[***] Press [B] to store the adjustment value after adjustment.	f.counter	TX-RX (A/5)	2nd Lo	Panel	[C],[D]	Change the adjustment value within the limit of the specified frequency.	50.400MHz ±50Hz

Transmitter Section

Item	Condition	Measurement			Adjustment			Specifications/Remarks
		Test-equipment	Unit	Terminal	Unit	Parts	Method	
1. Frequency adjust	1) Adj item:[Frequency] Adjust:[***] PTT:ON Press [B] to store the adjustment value after adjustment.	f.counter	Panel	ANT	Panel	[C],[D]	Center frequency ±50Hz	Note:After replacing the VCXO(X201) align frequency.
2. High power adjust	1) Adj item:[High Power] Adjust:[***] 2) Adj item:[L High Power]→[LC High Power]→[C High Power]→[CH High Power]→[H High Power] Adjust:[***] PTT:ON Press [B] to store the adjustment value after adjustment.	Power meter Ammeter					4.8W	+0.2W/-0.1W 2.0A or less
3. Low power adjust	1) Adj item:[Low Power] Adjust:[***] 2) Adj item:[L Low Power]→[C Low Power]→[H Low Power] Adjust:[***] PTT:ON Press [B] to store the adjustment value after adjustment.						1.0W	±0.2W 1.4A or less
4. MIC sensitivity check	1) Adj item:[Mic Sense] Adjust:[***] AG:1kHz/150mV at MIC terminal PTT:ON Press [B] to store the adjustment value after adjustment.	Deviation meter Oscilloscope AG AF VTVM	Panel	ANT Universal connector	Panel	[C],[D]	15mV	±3.5mV

ADJUSTMENT

Item	Condition	Measurement			Adjustment			Specifications/Remarks
		Test-equipment	Unit	Terminal	Unit	Parts	Method	
5. DQT balance adjust •Wide (Concentric SW:A)	1) Adj item:[W Balance] Adjust:[***] Deviation meter filter LPF:3kHz HPF:OFF 2) Adj item:[WL Balance]→[WLC Balance]→[WC Balance]→[WCH Balance]→[WH Balance] Adjust:[***] PTT:ON Press [B] to store the adjustment value after adjustment.	Deviation meter Oscilloscope AG AF VTVM	Panel	ANT Universal connector	Panel	[C],[D]	Make the demodulation waves into square waves.	
•Narrow (Concentric SW:B)	3) Adj item:[N Balance] Adjust:[***] PTT:ON Press [B] to store the adjustment value after adjustment.							
•APCO (Concentric SW:C)	4) Adj item:[A Balance] Adjust:[***] PTT:ON Press [B] to store the adjustment value after adjustment.							
6. Max DEV adjust •Wide (Concentric SW:A)	1) Adj item:[W FM Max Dev] Adjust:[***] AG:1kHz/150mV at MIC terminal Deviation meter filter LPF:15kHz HPF:OFF 2) Adj item:[WL FM Max Dev]→[WLC FM Max Dev]→[WC FM Max Dev]→[WCH FM Max Dev]→[WH FM Max Dev] Adjust:[***] PTT:ON Press [B] to store the adjustment value after adjustment.						4.0kHz (According to the large +, -)	±50Hz
•Narrow (Concentric SW:B, C)	3) Adj item:[N FM Max Dev] Adjust:[***] PTT:ON Press [B] to store the adjustment value after adjustment.						2.0kHz (According to the large +, -)	±50Hz
7. APCO high deviation adjust	1) Adj item:[A APCO Hi Dev] Adjust:[***] Deviation meter filter LPF:3kHz HPF:OFF 2) Adj item:[AL APCO Hi Dev]→[ALC APCO Hi Dev]→[AC APCO Hi Dev]→[ACH APCO Hi Dev]→[AH APCO Hi Dev] PTT:ON Press [B] to store the adjustment value after adjustment.						2827Hz	2771~2883Hz

ADJUSTMENT

Item	Condition	Measurement			Adjustment			Specifications/Remarks
		Test-equipment	Unit	Terminal	Unit	Parts	Method	
8. QT deviation adjust •Wide (Concentric SW:A)	1) Adj item:[W QT Dev] Adjust:[***] Deviation meter filter LPF:3kHz HPF:OFF 2) Adj item:[WL QT Dev]→[WLC QT Dev]→[WC QT Dev]→[WCH QT Dev]→[WH QT Dev] Adjust:[***] PTT:ON Press [B] to store the adjustment value after adjustment.	Power meter Deviation meter Oscilloscope AG AF VTVM	Panel	ANT Universal connector	Panel	[C],[D]	0.75kHz	±50Hz
•Narrow (Concentric SW:B,C)	3) Adj item:[N QT Dev] Adjust:[***] PTT:ON Press [B] to store the adjustment value after adjustment.						0.375kHz	±50Hz
9. DQT deviation adjust •Wide (Concentric SW:A)	1) Adj item:[W DQT Dev] Adjust:[***] Deviation meter filter LPF:3kHz HPF:OFF 2) Adj item:[WL DQT Dev]→[WLC DQT Dev]→[WC DQT Dev]→[WCH DQT Dev]→[WH DQT Dev] Adjust:[***] PTT:ON Press [B] to store the adjustment value after adjustment.						0.75kHz	±50Hz
•Narrow (Concentric SW:B, C)	3) Adj item:[N DQT Dev] Adjust:[***] PTT:ON Press [B] to store the adjustment value after adjustment.						0.375kHz	±50Hz
10.DTMF deviation adjust •Wide (Concentric SW:A)	1) Adj item:[W DTMF Dev] Adjust:[***] Deviation meter filter LPF:15kHz HPF:OFF PTT:ON Press [B] to store the adjustment value after adjustment.						3.0kHz	±50Hz
•Narrow (Concentric SW:B, C)	2) Adj item:[N DTMF Dev] Adjust:[***] PTT:ON Press [B] to store the adjustment value after adjustment.						1.5kHz	±50Hz

ADJUSTMENT

Item	Condition	Measurement			Adjustment			Specifications/Remarks
		Test-equipment	Unit	Terminal	Unit	Parts	Method	
11.Single tone deviation adjust •Wide (Concentric SW:A)	1) Adj item:[W Tone Dev] Adjust:[***] Deviation meter filter LPF:15kHz HPF:OFF PTT:ON Press [B] to store the adjustment value after adjustment.	Power meter Deviation meter Oscilloscope AG AF VTVM	Panel	ANT Universal connector	Panel	[C],[D]	3.0kHz	±50Hz
•Narrow (Concentric SW:B, C)	2) Adj item:[N Tone Dev] Adjust:[***] PTT:ON Press [B] to store the adjustment value after adjustment.						1.5kHz	±50Hz
12.MSK deviation adjust •Wide (Concentric SW:A)	1) Adj item:[W MSK Dev] Adjust:[***] Deviation meter filter LPF:15kHz HPF:OFF PTT:ON Press [B] to store the adjustment value after adjustment.						3.0kHz	±50Hz
•Narrow (Concentric SW:B, C)	2) Adj item:[N MSK Dev] Adjust:[***] PTT:ON Press [B] to store the adjustment value after adjustment.						1.5kHz	±50Hz
13.BATT TX inhibit voltage adjust	1) Adj item:[Battery] Adjust:[***] PTT:ON	Power meter DVM	Panel	ANT BATT terminal	Panel		After pressing the PTT switch, confirm that one predetermined numeric in the range 1 to 256 appears and then press [B] key. That numeric will be stored in memory.	BATT terminal voltage:5.8V
14.BATT TX inhibit voltage Check	[Panel test mode] 1) CH-Sig:1-1 BATT terminal voltage:6.0V PTT:ON						Check	The transceiver can transmit and the red LED blinking.
	BATT terminal voltage:5.8V PTT:ON							The transceiver cannot transmit.

ADJUSTMENT

Receiver Section

Item	Condition	Measurement			Adjustment			Specifications/Remarks
		Test-equipment	Unit	Terminal	Unit	Parts	Method	
1. AF level Setting	[Panel test mode] 1) CH-Sig:1-1 SSG output:-47dBm(1mV) (MOD:1kHz/±3kHz)	SSG DVM AF VTVM Dummy load	Panel	ANT Universal connector	Panel	Volume Knob	Turn the Volume Knob to obtain 0.63V AF output.	0.63V±0.1V
2. Sensitivity Check •Wide (Concentric SW:A)	1) CH-Sig:1-1 SSG output:-118dBm(0.28µV) (MOD:1kHz/±3kHz)	SSG AF VTVM Oscilloscope					Check	12dB SINAD or more
	2) CH-Sig:2-1							
	3) CH-Sig:3-1							
•Narrow (Concentric SW:B)	4) CH-Sig:1-1 SSG output:-118dBm(0.28µV) (MOD:1kHz/±1.5kHz)							
	5) CH-Sig:2-1							
	6) CH-Sig:3-1							
3. RSSI reference adjust	[Panel tuning mode] 1) Adj item:[RSSI(Ref)] Adjust:[***] 2) Adj item:[L RSSI(Ref)]→[C RSSI(Ref)]→[H RSSI(Ref)] Adjust:[***] SSG output:12dB SINAD level -3dB (MOD:1kHz/±3kHz)				Panel		After input signal from SSG, press [B] key. That numeric will be stored in memory.	
4. Squelch (Threshold) adjust •Wide (Concentric SW:A)	1) Adj item:[W Squelch(1)] Adjust:[***] 2) Adj item:[WL Squelch(1)]→[WC Squelch(1)]→[WH Squelch(1)] Adjust:[***] SSG output:12dB SINAD level -3dB (MOD:1kHz/±3kHz)						After input signal from SSG, press [B] key. That numeric will be stored in memory.	After adjusting SQL, check SQL open/close. [Panel test mode] 1) CH-Sig:1-1 SSG 12dB SINAD level -1.5dB:Open SSG -130dBm(0.07µV):Close 2) CH-Sig:2-1 SSG 12dB SINAD level -1.5dB:Open SSG -130dBm(0.07µV):Close 3) CH-Sig:3-1 SSG 12dB SINAD level -1.5dB:Open SSG -130dBm(0.07µV):Close
•Narrow (Concentric SW:B, C)	3) Adj item:[N Squelch(1)] Adjust:[***] SSG output:12dB SINAD level -4dB (MOD:1kHz/±1.5kHz)							After adjusting SQL, check SQL open/Close. [Panel test mode] 1) CH-Sig:1-1 SSG 12dB SINAD level -1.5dB:Open SSG -130dBm(0.07µV):Close 2) CH-Sig:2-1 SSG 12dB SINAD level -1.5dB:Open SSG -130dBm(0.07µV):Close 3) CH-Sig:3-1 SSG 12dB SINAD level -1.5dB:Open SSG -130dBm(0.07µV):Close

ADJUSTMENT

Item	Condition	Measurement			Adjustment			Specifications/Remarks
		Test-equipment	Unit	Terminal	Unit	Parts	Method	
5. Squelch (Tight) adjust •Wide (Concentric SW:A)	1) Adj item:[W Squelch(9)] Adjust:[***] 2) Adj item:[WL Squelch(9)]→[WC Squelch(9)]→[WH Squelch(9)] Adjust:[***] SSG output:12dB SINAD level +6dB (MOD:1kHz/±3kHz)	SSG AF VTVM Oscilloscope	Panel	ANT Universal connector	Panel		After input signal from SSG, press [B] key. That numeric will be stored in memory.	After adjusting SQL, check SQL open/close. **[Panel test mode]** 1) CH-Sig:1-1 SSG 12dB SINAD level +8dB:Open SSG 12dB SINAND level :Close 2) CH-Sig:2-1 SSG 12dB SINAD level +8dB:Open SSG 12dB SINAD level :Close 3) CH-Sig:3-1 SSG 12dB SINAD level +8dB:Open SSG 12dB SINAD level :Close
•Narrow (Concentric SW:B, C)	3) Adj item:[N Squelch(9)] Adjust:[***] SSG output:12dB SINAD level +6dB (MOD:1kHz/±1.5kHz)							After adjusting SQL, check SQL open/close. **[Panel test mode]** 1) CH-Sig:1-1 SSG -112dBm(0.562µV):Open SSG -116dBm(0.35µV):Close 2) CH-Sig:2-1 SSG -112dBm(0.562µV):Open SSG -117dBm(0.32µV):Close 3) CH-Sig:3-1 SSG -112dBm(0.562µV):Open SSG -117dBm(0.32µV):Close
6. RSSI (-120dBm) adjust	1) Adj item:[RSSI(-120)] Adjust:[***] 2) Adj item:[L RSSI(-120)]→[C RSSI(-120)]→[H RSSI(-120)] Adjust:[***] SSG output:-120dBm(0.22µV) (MOD:1kHz/±3kHz)						After input signal from SSG, press [B] key. That numeric will be stored in memory.	
7. RSSI (-70dBm) adjust	1) Adj item:[RSSI(-70)] Adjust:[***] 2) Adj item:[L RSSI(-70)]→[C RSSI(-70)]→[H RSSI(-70)] Adjust:[***] SSG output:-70dBm(70.8µV) (MOD:1kHz/±3kHz)							
8. BER (Bit Error Rate) check	**[Panel test mode]** 1) CH-sig:1-20 SSG output:-118dBm(0.28µV) (C4FM) (1011Hz Tone Test Pattern)	Digital radio tester					Check	5% or less

TK-5210 PC BOARD

TX-RX UNIT (X57-6820-XX) (A/5) : TX-RX section
-10 : K -11 : K2 -12 : K3 Component side view (J72-0926-19 A/5)

Ref. No.	Adress	Ref. No.	Adress	Ref. No.	Adress	Ref. No.	Adress	Ref. No.	Adress
IC2	4R	IC405	8N	Q201	8L	Q412	8Q	D304	5K
IC9	4P	IC406	7M	Q202	6C	D13	3M	D306	4L
IC10	3P	IC407	7L	Q204	4I	D14	3O	D307	6K
IC11	4Q	IC408	6Q	Q205	7H	D108	4B	D308	4L
IC13	4N	IC409	8M	Q209	7J	D109	4C	D309	4L
IC102	6B	IC411	6P	Q310	4K	D202	5D	D310	6K
IC103	6B	IC412	7P	Q311	5K	D203	5D	D311	5K
IC201	8K	IC413	5Q	Q313	4K	D204	6D	D312	5K
IC202	6E	IC415	7R	Q404	8P	D205	6D	D401	4H
IC203	8I	IC416	5S	Q405	8P	D206	8D	D402	8O
IC204	6I	IC417	4R	Q406	7O	D207	8D	D403	8O
IC208	7K	IC501	6Q	Q407	8N	D208	8D	D404	7Q
IC403	8P	IC502	7S	Q408	8O	D209	8D	D405	8Q
IC404	7N	Q1	7Q	Q411	7N	D303	4L		

TX-RX UNIT (X57-6820-XX) (A/5) : TX-RX section
-10 : K -11 : K2 -12 : K3 Component side view (J72-0926-19 A/5)

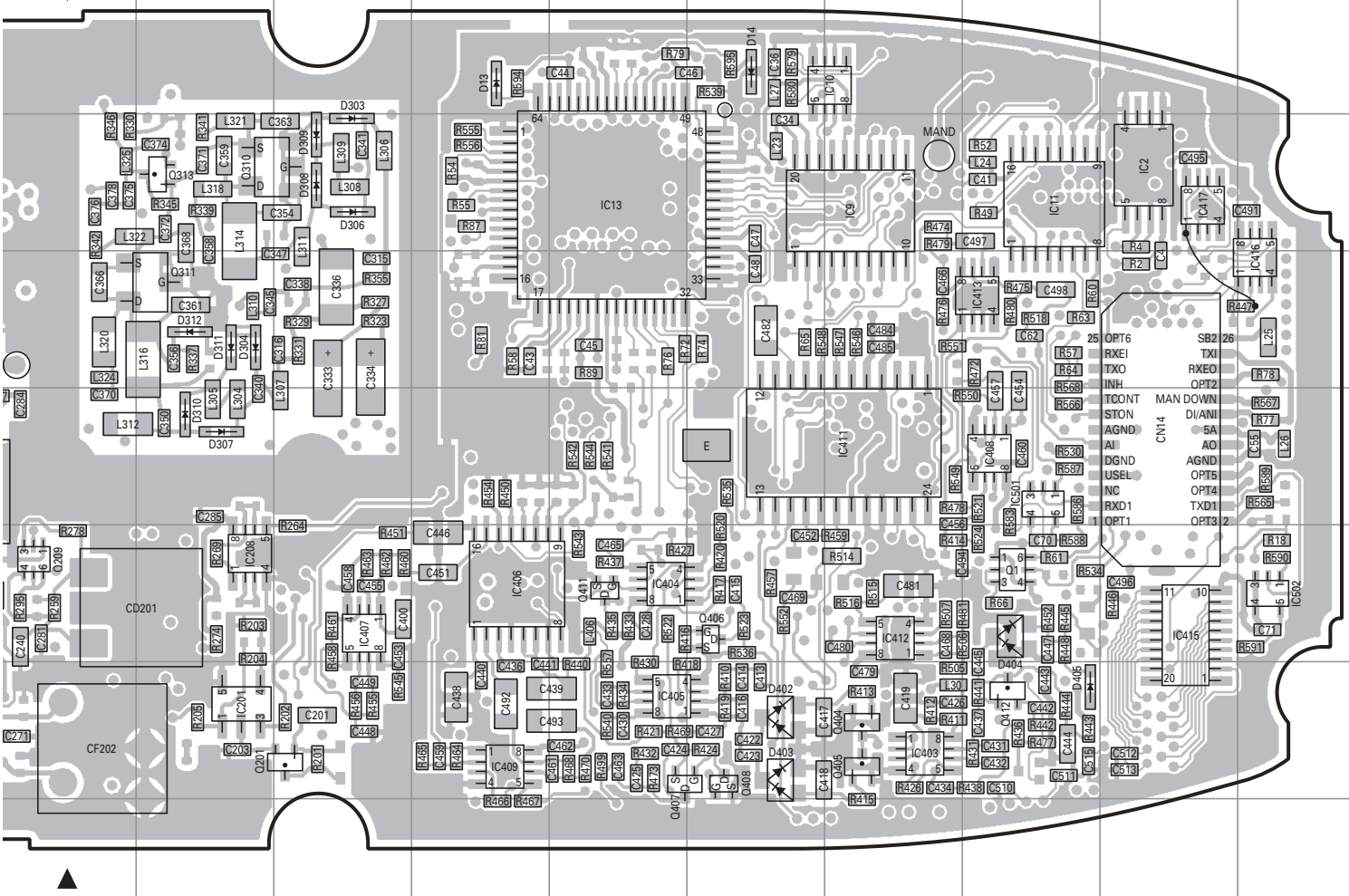

Component side
Layer 1
Layer 2
Layer 3
Layer 4
Layer 5
Layer 6
Foil side

PC BOARD TK-5210

TX-RX UNIT (X57-6820-XX) (A/5) : TX-RX section
-10 : K -11 : K2 -12 : K3 Component side view (J72-0926-19 A/5)

TX-RX UNIT (X57-6820-XX) (A/5) : TX-RX section
-10 : K -11 : K2 -12 : K3 Component side view (J72-0926-19 A/5)

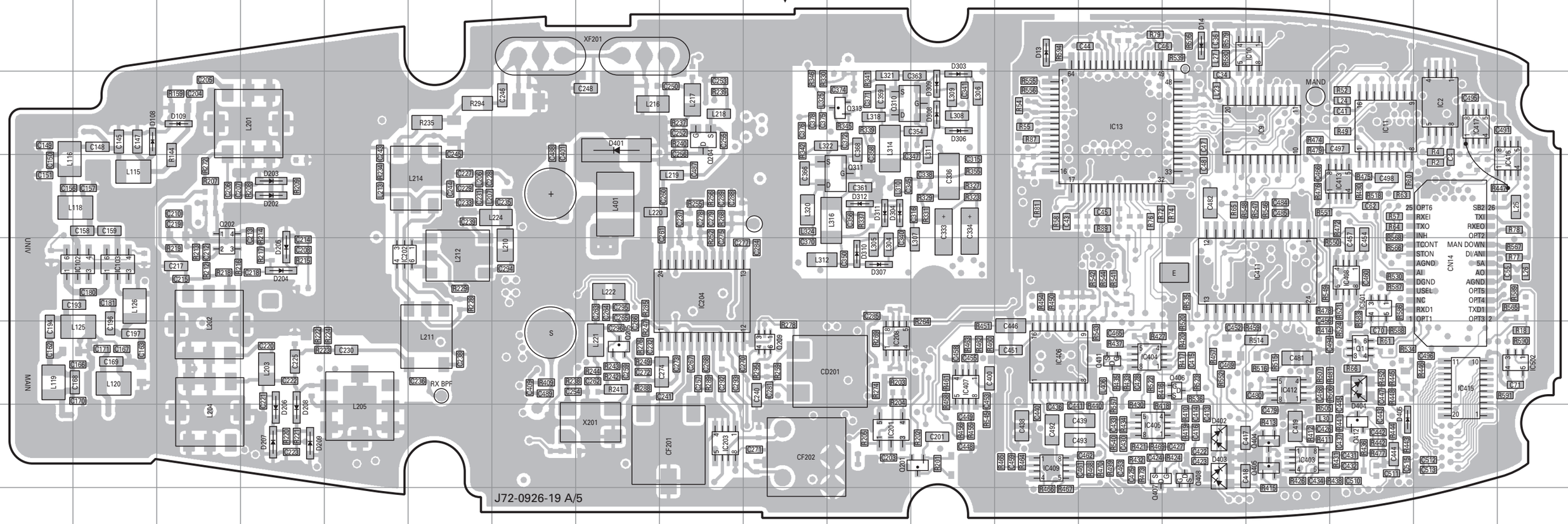

Ref. No.	Adress	Ref. No.	Adress	Ref. No.	Adress	Ref. No.	Adress	Ref. No.	Adress
IC2	4R	IC405	8N	Q201	8L	Q412	8Q	D304	5K
IC9	4P	IC406	7M	Q202	6C	D13	3M	D306	4L
IC10	3P	IC407	7L	Q204	4I	D14	3O	D307	6K
IC11	4Q	IC408	6Q	Q205	7H	D108	4B	D308	4L
IC13	4N	IC409	8M	Q209	7J	D109	4C	D309	4L
IC102	6B	IC411	6P	Q310	4K	D202	5D	D310	6K
IC103	6B	IC412	7P	Q311	5K	D203	5D	D311	5K
IC201	8K	IC413	5Q	Q313	4K	D204	6D	D312	5K
IC202	6E	IC415	7R	Q404	8P	D205	6D	D401	4H
IC203	8I	IC416	5S	Q405	8P	D206	8D	D402	8O
IC204	6I	IC417	4R	Q406	7O	D207	8D	D403	8O
IC208	7K	IC501	6Q	Q407	8N	D208	8D	D404	7Q
IC403	8P	IC502	7S	Q408	8O	D209	8D	D405	8Q
IC404	7N	Q1	7Q	Q411	7N	D303	4L		

Component side
Layer 1
Layer 2
Layer 3
Layer 4
Layer 5
Layer 6
Foil side

TK-5210 PC BOARD

TX-RX UNIT (X57-6820-XX) (A/5) : TX-RX section
-10 : K -11 : K2 -12 : K3 Foil side view (J72-0926-19 A/5)

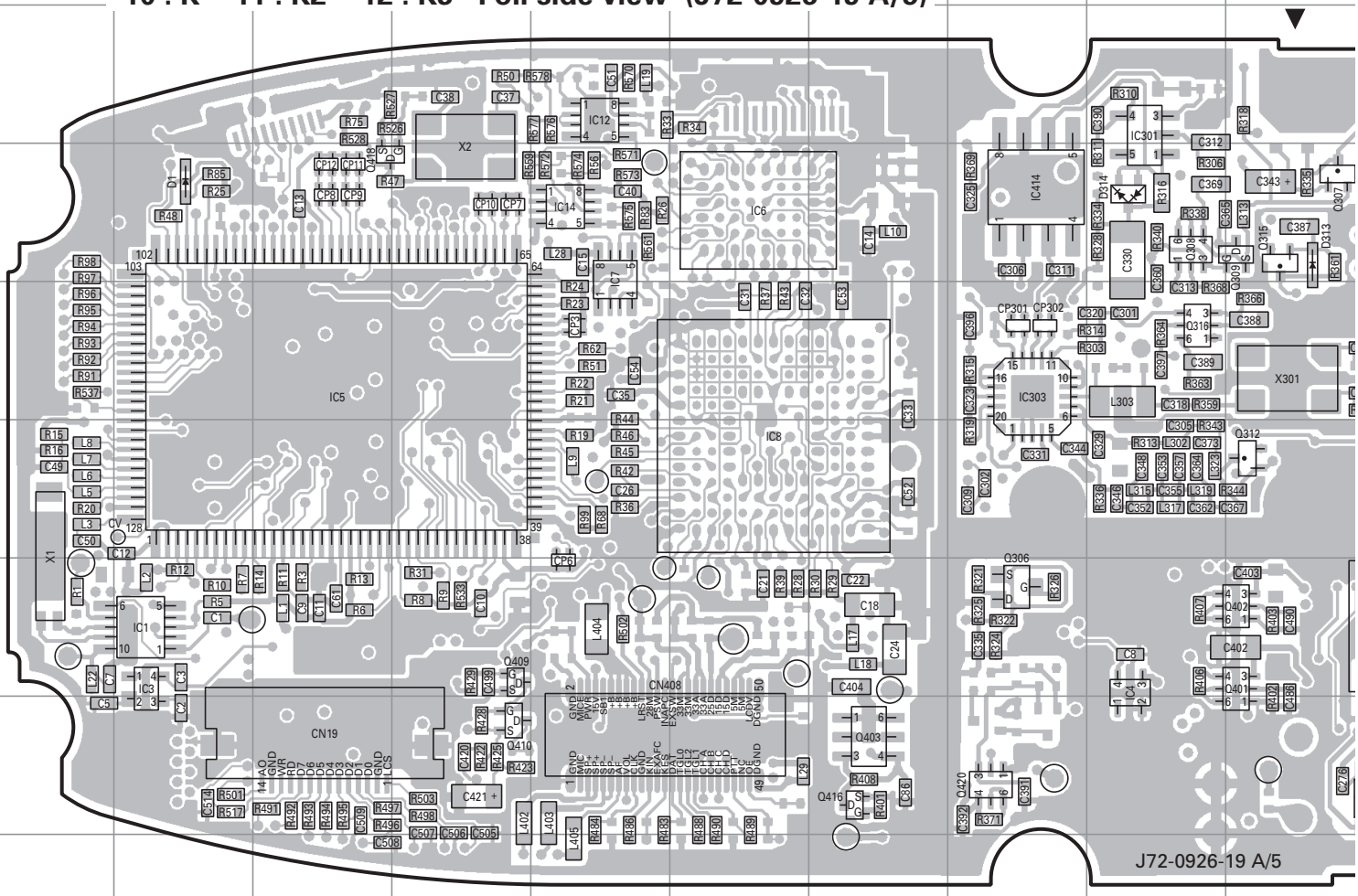

Ref. No.	Address	Ref. No.	Address	Ref. No.	Address	Ref. No.	Address	Ref. No.	Address
IC1	7B	IC207	8K	Q107	7Q	Q403	8G	D6	7N
IC3	7B	IC301	3I	Q110	6R	Q409	7D	D101	4L
IC4	7I	IC303	5H	Q111	7Q	Q410	8D	D105	7Q
IC5	5C	IC304	5K	Q306	7H	Q415	6L	D106	4T
IC6	4F	IC401	7L	Q307	4J	Q416	8G	D107	4T
IC7	4E	IC402	6K	Q308	4I	Q417	7P	D110	7S
IC8	6F	IC414	4H	Q309	4J	Q418	4C	D111	6S
IC12	3E	Q101	4L	Q312	6J	Q420	8H	D210	4L
IC14	4E	Q102	4M	Q314	5L	D1	4B	D313	4J
IC101	7P	Q103	4N	Q315	4J	D2	7N	D314	4I
IC104	8P	Q104	7Q	Q316	5I	D3	7N		
IC205	8K	Q105	5O	Q401	7J	D4	8O		
IC206	8K	Q106	7Q	Q402	7J	D5	8O		

TX-RX UNIT (X57-6820-XX) (A/5) : TX-RX section
-10 : K -11 : K2 -12 : K3 Foil side view (J72-0926-19 A/5)

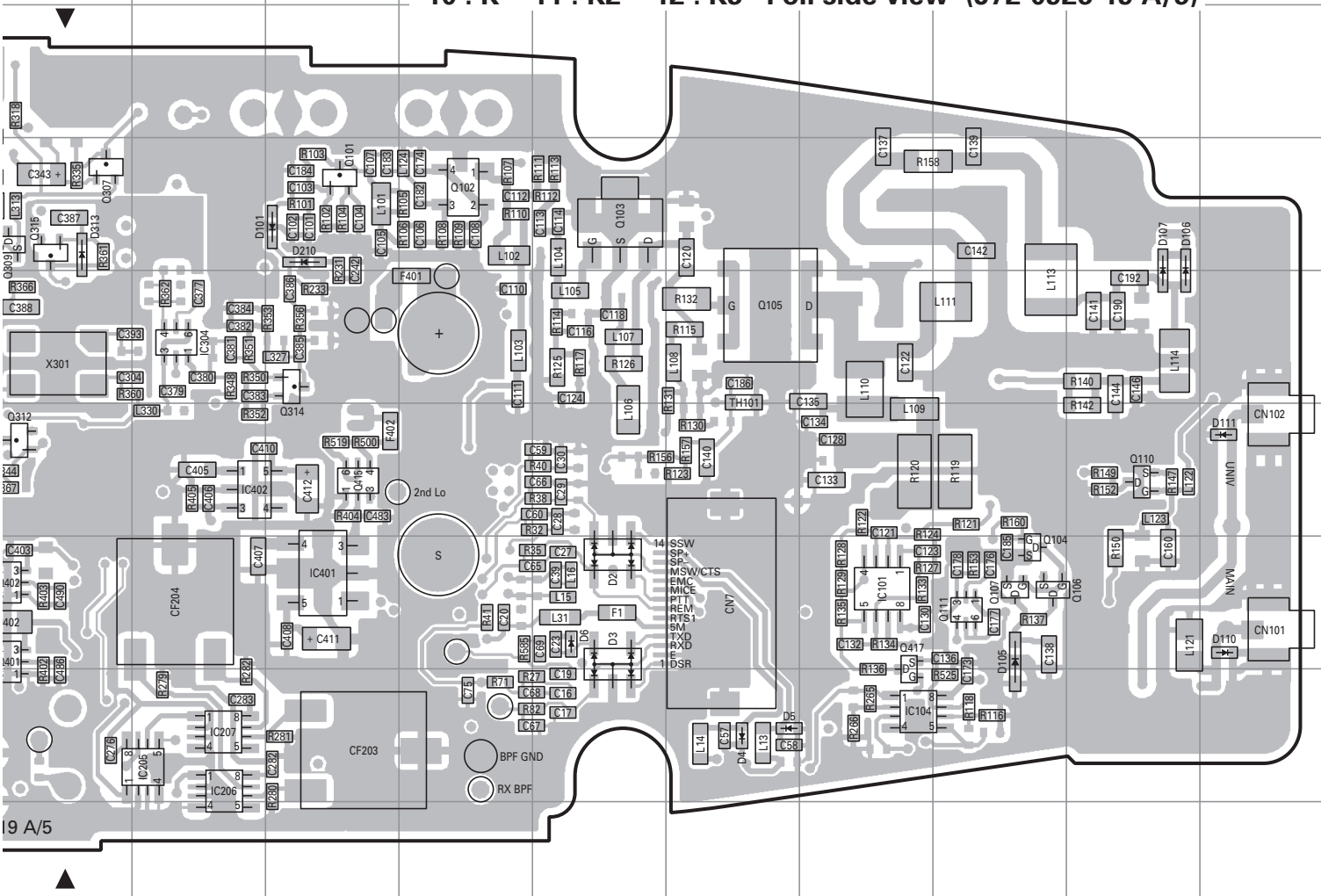

Component side
Layer 1
Layer 2
Layer 3
Layer 4
Layer 5
Layer 6
Foil side

PC BOARD TK-5210

TX-RX UNIT (X57-6820-XX) (A/5) : TX-RX section
-10 : K -11 : K2 -12 : K3 Foil side view (J72-0926-19 A/5)

TX-RX UNIT (X57-6820-XX) (A/5) : TX-RX section
-10 : K -11 : K2 -12 : K3 Foil side view (J72-0926-19 A/5)

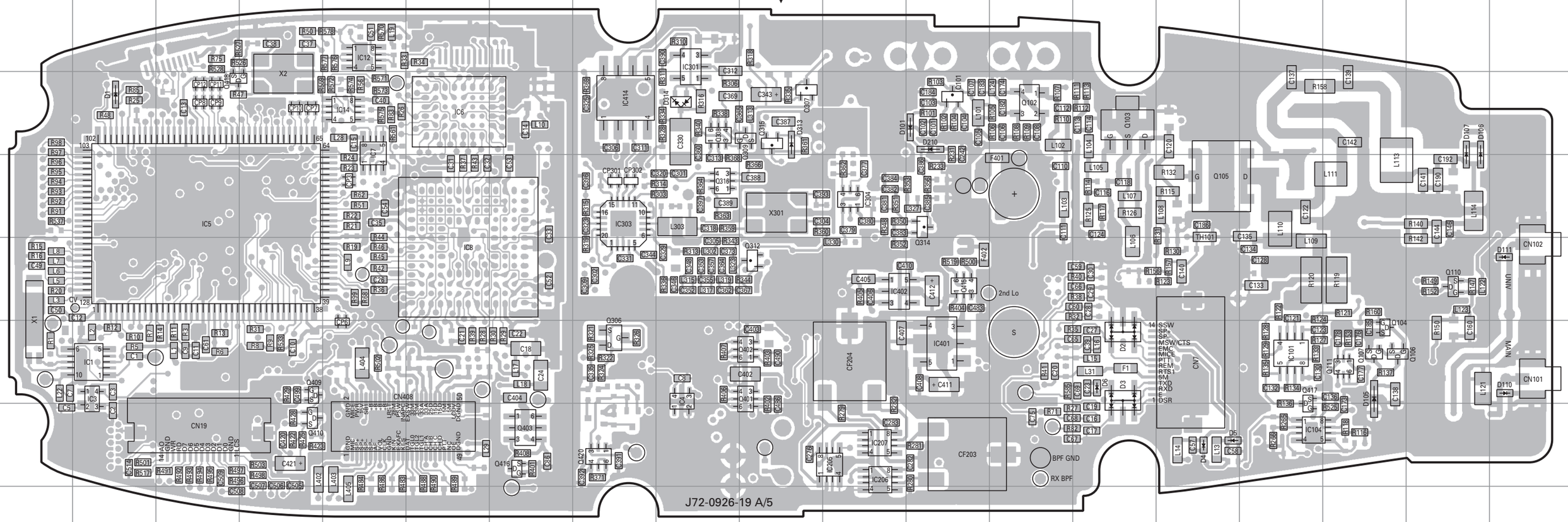

Ref. No.	Address	Ref. No.	Address	Ref. No.	Address	Ref. No.	Address	Ref. No.	Address
IC1	7B	IC207	8K	Q107	7Q	Q403	8G	D6	7N
IC3	7B	IC301	3I	Q110	6R	Q409	7D	D101	4L
IC4	7I	IC303	5H	Q111	7Q	Q410	8D	D105	7Q
IC5	5C	IC304	5K	Q306	7H	Q415	6L	D106	4T
IC6	4F	IC401	7L	Q307	4J	Q416	8G	D107	4T
IC7	4E	IC402	6K	Q308	4I	Q417	7P	D110	7S
IC8	6F	IC414	4H	Q309	4J	Q418	4C	D111	6S
IC12	3E	Q101	4L	Q312	6J	Q420	8H	D210	4L
IC14	4E	Q102	4M	Q314	5L	D1	4B	D313	4J
IC101	7P	Q103	4N	Q315	4J	D2	7N	D314	4I
IC104	8P	Q104	7Q	Q316	5I	D3	7N		
IC205	8K	Q105	5O	Q401	7J	D4	8O		
IC206	8K	Q106	7Q	Q402	7J	D5	8O		

Component side
Layer 1
Layer 2
Layer 3
Layer 4
Layer 5
Layer 6
Foil side

TK-5210 PC BOARD

TX-RX UNIT (X57-6820-XX) (B/5) : Control section
-10 : K -11 : K2 -12 : K3 Component side view (J72-0926-19 B/5)

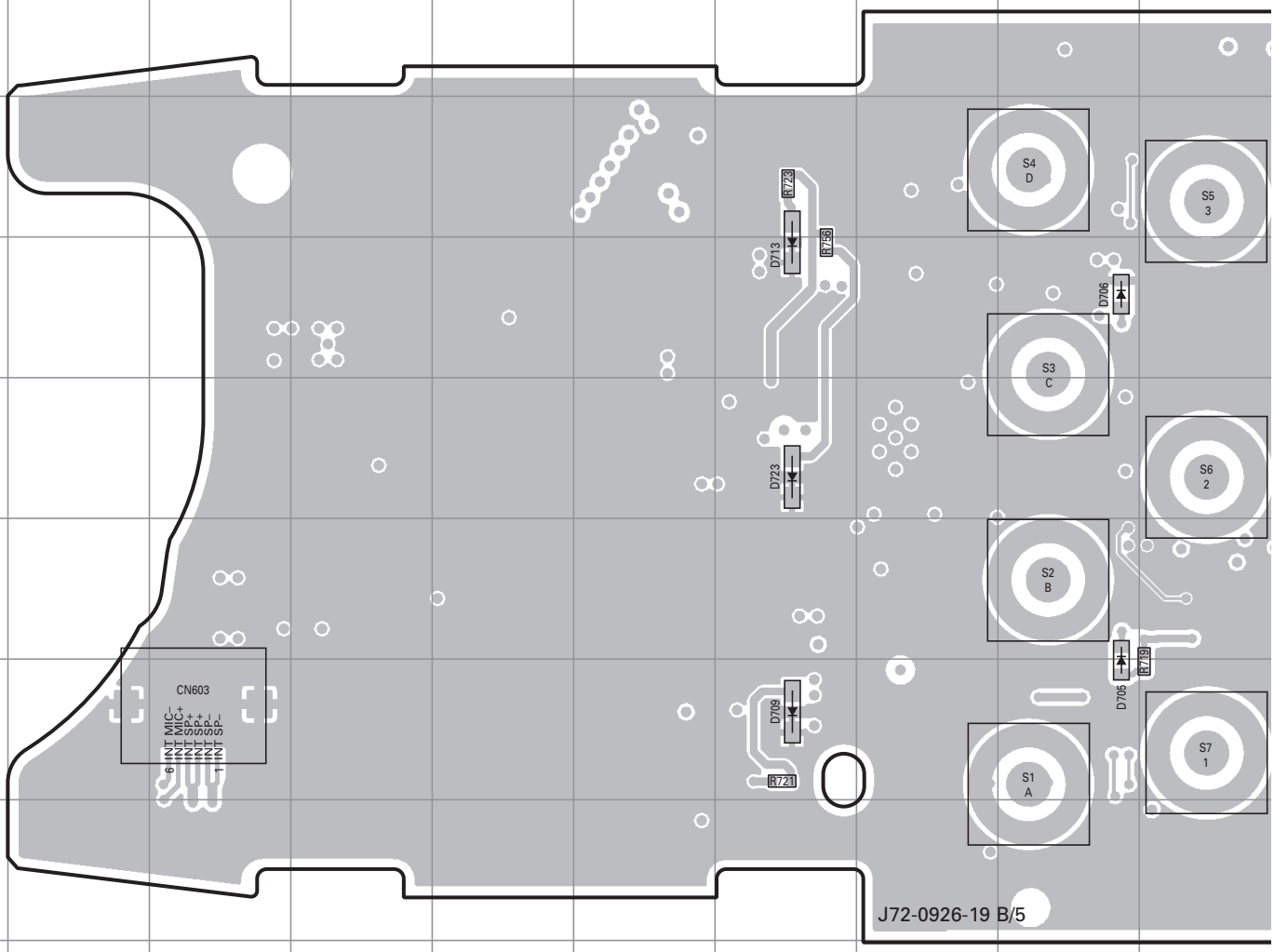

TX-RX UNIT (X57-6820-XX) (C/5) : Top section
-10 : K -11 : K2 -12 : K3 Component side view (J72-0926-19 C/5)

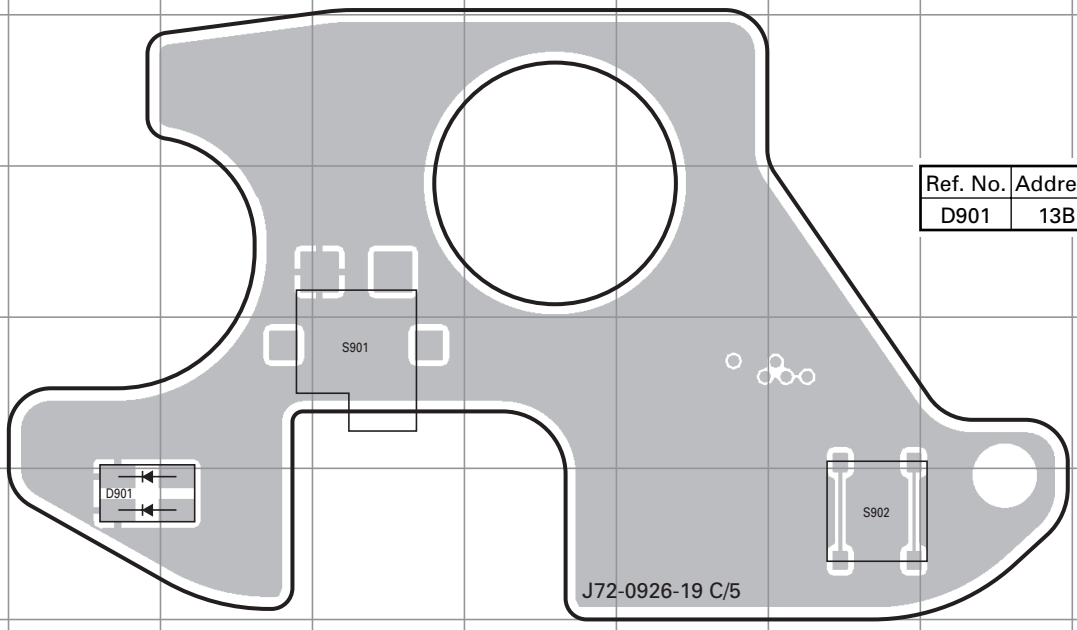

Ref. No.	Address
D901	13B

PC BOARD TK-5210

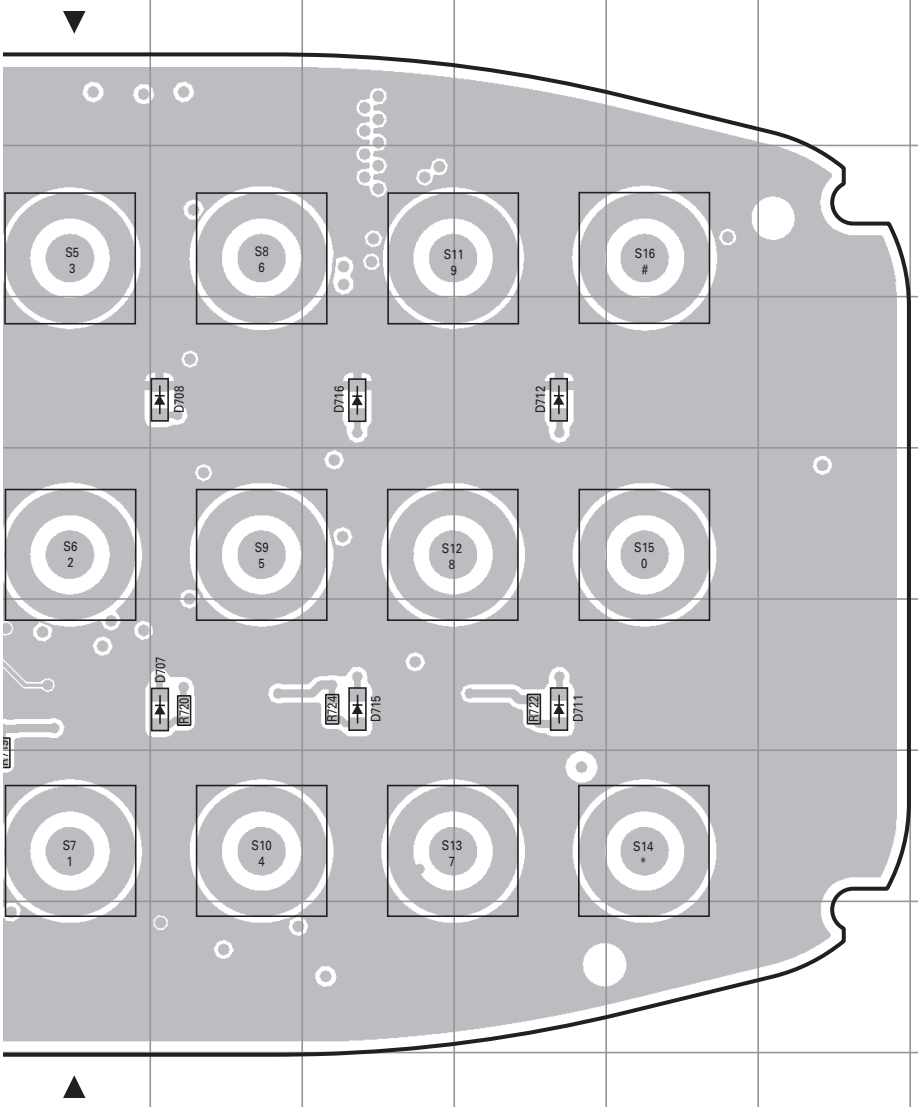

Ref. No.	Address
D705	7I
D706	4I
D707	6K
D708	4K
D709	7G
D711	6M
D712	4M
D713	4G
D715	6L
D716	4L
D723	5G

Component side

Layer 1	
Layer 2	
Layer 3	
Layer 4	
Layer 5	
Layer 6	

Foil side

TX-RX UNIT (X57-6820-XX) (D/5)
: Option section
-10 : K -11 : K2 -12 : K3
Component side view
(J72-0926-19 D/5)

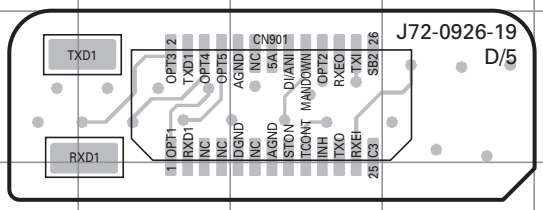

TX-RX UNIT (X57-6820-XX) (E/5)
: ANT section
-10 : K -11 : K2 -12 : K3
Component side view
(J72-0926-19 E/5)

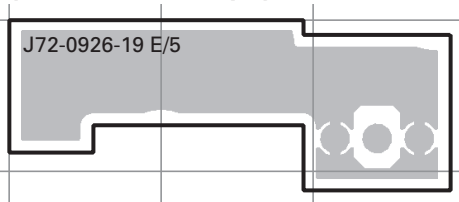

PC BOARD TK-5210

TX-RX UNIT (X57-6820-XX) (B/5) : Control section
-10 : K -11 : K2 -12 : K3 Component side view (J72-0926-19 B/5)

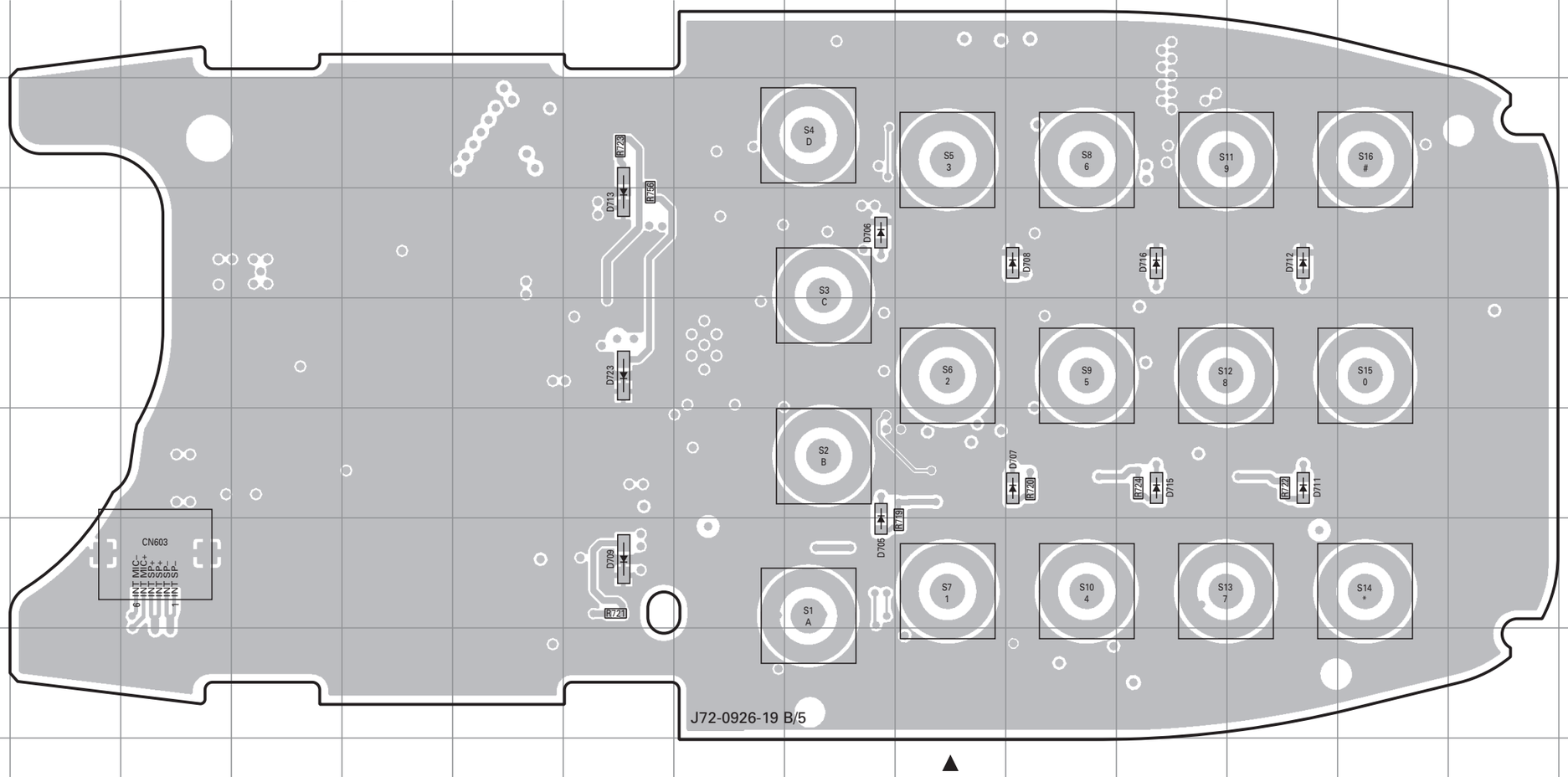

Ref. No.	Address
D705	7I
D706	4I
D707	6K
D708	4K
D709	7G
D711	6M
D712	4M
D713	4G
D715	6L
D716	4L
D723	5G

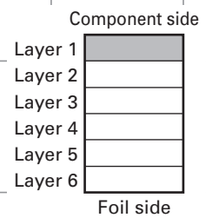

TX-RX UNIT (X57-6820-XX) (C/5) : Top section
-10 : K -11 : K2 -12 : K3 Component side view (J72-0926-19 C/5)

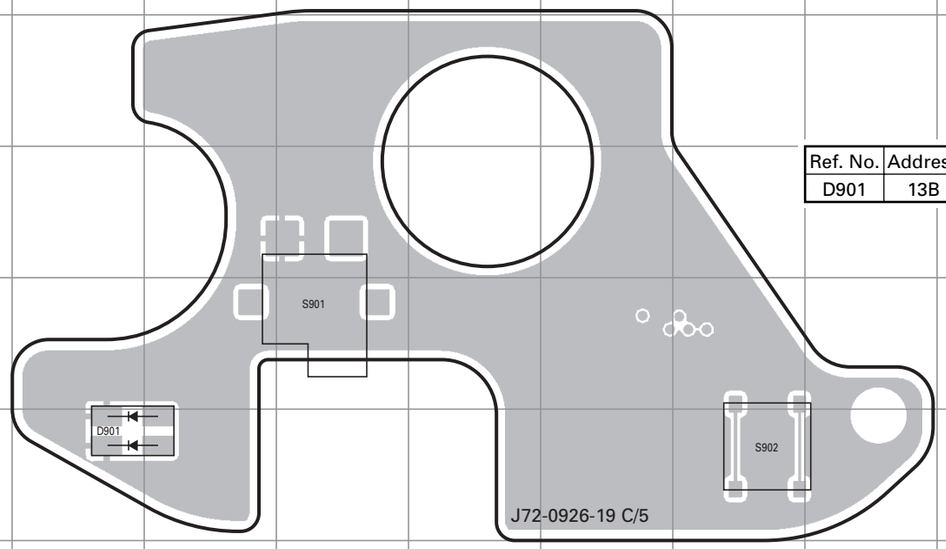

Ref. No.	Address
D901	13B

TX-RX UNIT (X57-6820-XX) (D/5) : Option section
-10 : K -11 : K2 -12 : K3 Component side view (J72-0926-19 D/5)

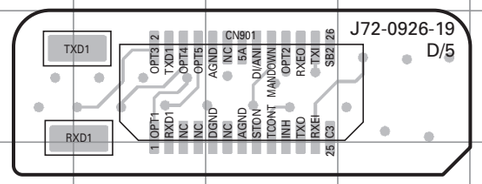

TX-RX UNIT (X57-6820-XX) (E/5) : ANT section
-10 : K -11 : K2 -12 : K3 Component side view (J72-0926-19 E/5)

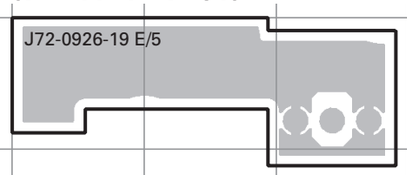

TK-5210 PC BOARD

TX-RX UNIT (X57-6820-XX) (B/5) : Control section
-10 : K -11 : K2 -12 : K3 Foil side view (J72-0926-19 B/5)

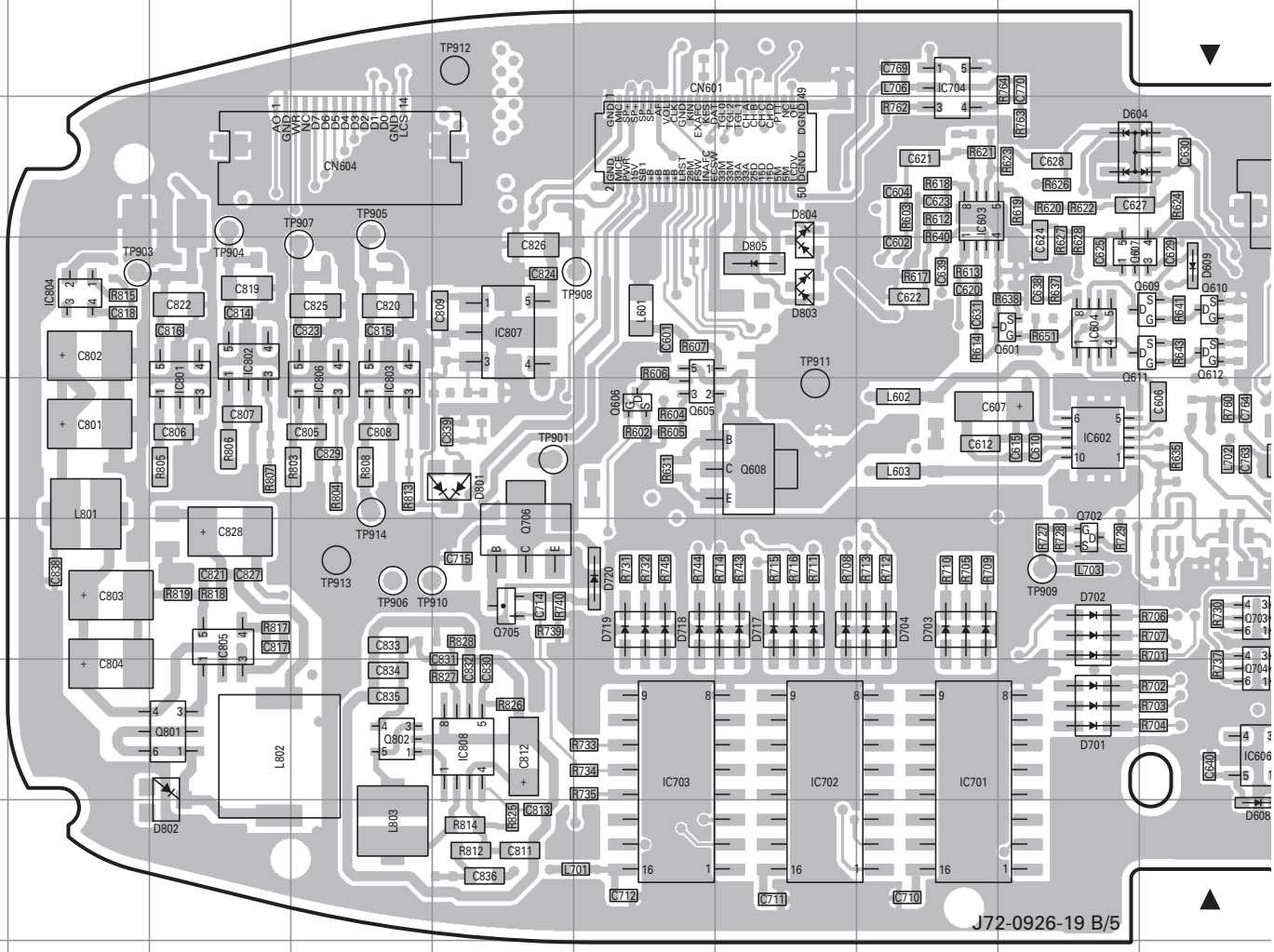

TX-RX UNIT (X57-6820-XX) (C/5) : Top section
-10 : K -11 : K2 -12 : K3 Foil side view (J72-0926-19 C/5)

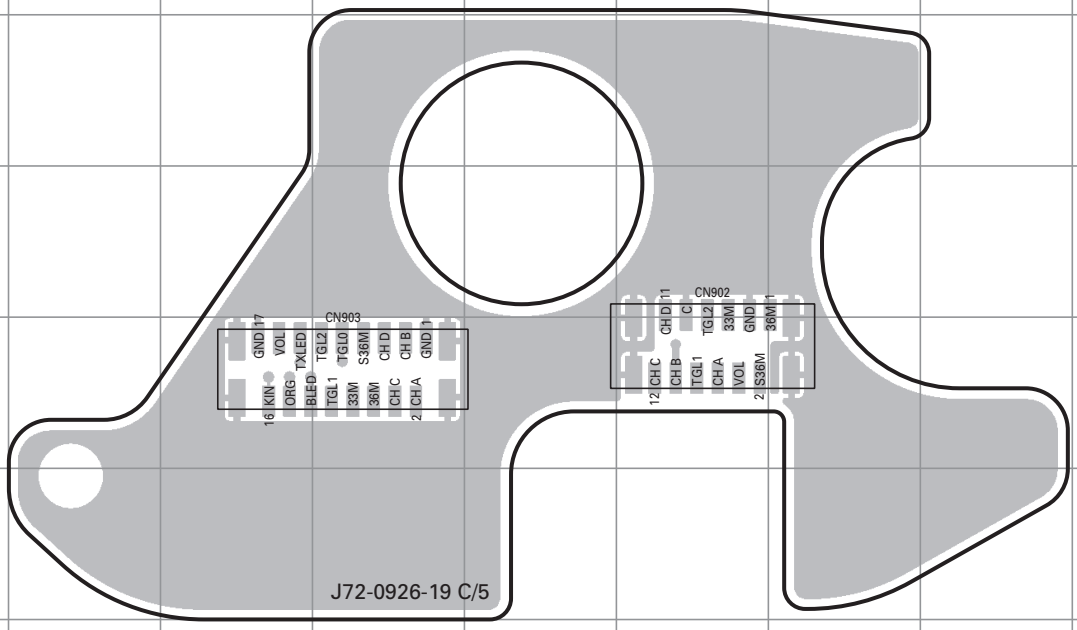

PC BOARD TK-5210

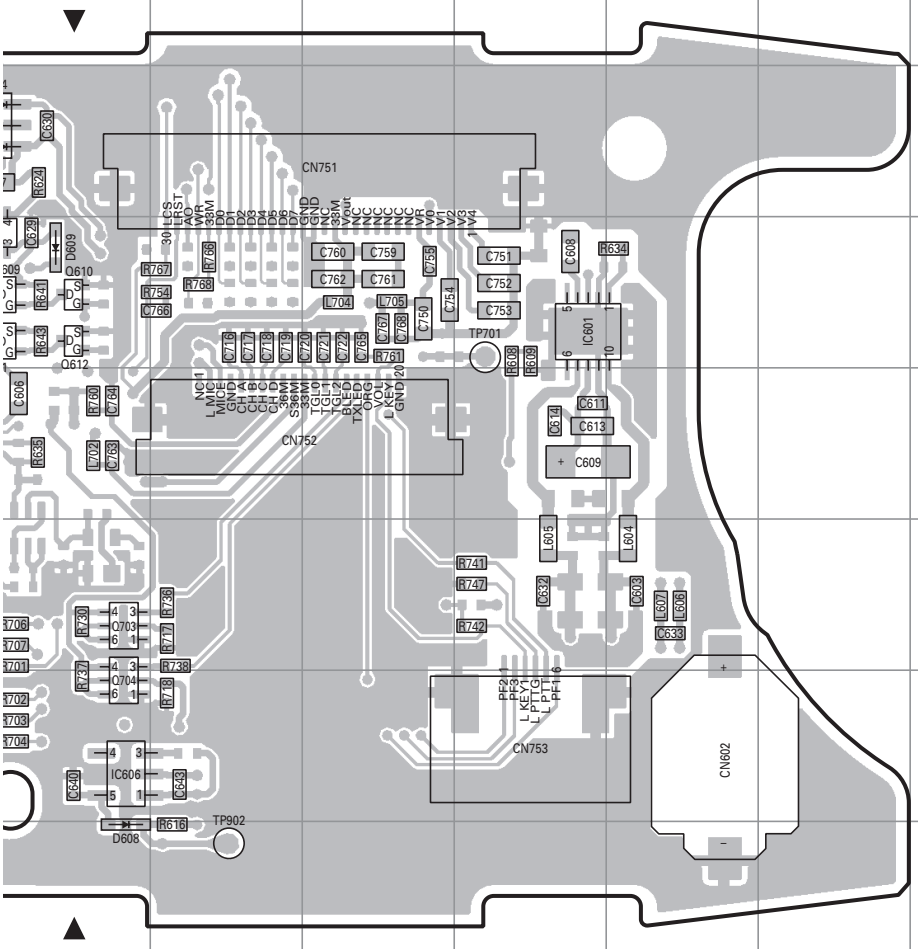

Ref. No.	Address	Ref. No.	Address	Ref. No.	Address
IC601	4M	Q601	4I	D608	8J
IC602	5I	Q605	5F	D609	4J
IC603	3H	Q606	5F	D701	7I
IC604	4I	Q607	4I	D702	6I
IC606	7J	Q608	5G	D703	6H
IC701	7H	Q609	4J	D704	6H
IC702	7G	Q610	4J	D717	6G
IC703	7F	Q611	4J	D718	6G
IC704	2H	Q612	4J	D719	6F
IC801	5C	Q702	6I	D720	6F
IC802	4C	Q703	6J	D801	5E
IC803	5D	Q704	7J	D802	8C
IC804	4B	Q705	6E	D803	4G
IC805	6C	Q706	6E	D804	3G
IC806	5D	Q801	7C	D805	4G
IC807	4E	Q802	7D		
IC808	7E	D604	3I		

TX-RX UNIT (X57-6820-XX) (D/5)
: Option section
-10 : K -11 : K2 -12 : K3
Foil side view (J72-0926-19 D/5)

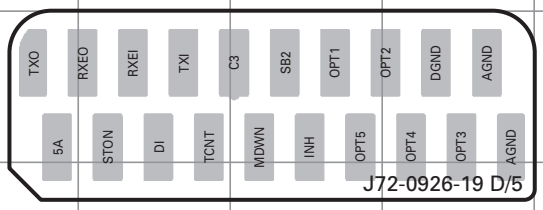

TX-RX UNIT (X57-6820-XX) (E/5)
: ANT section
-10 : K -11 : K2 -12 : K3
Foil side view (J72-0926-19 E/5)

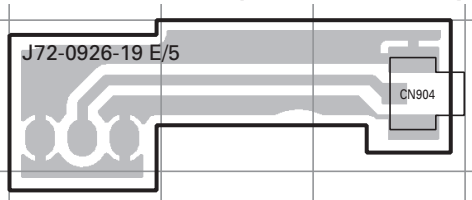

PC BOARD TK-5210

TX-RX UNIT (X57-6820-XX) (B/5) : Control section

-10 : K -11 : K2 -12 : K3 Foil side view (J72-0926-19 B/5)

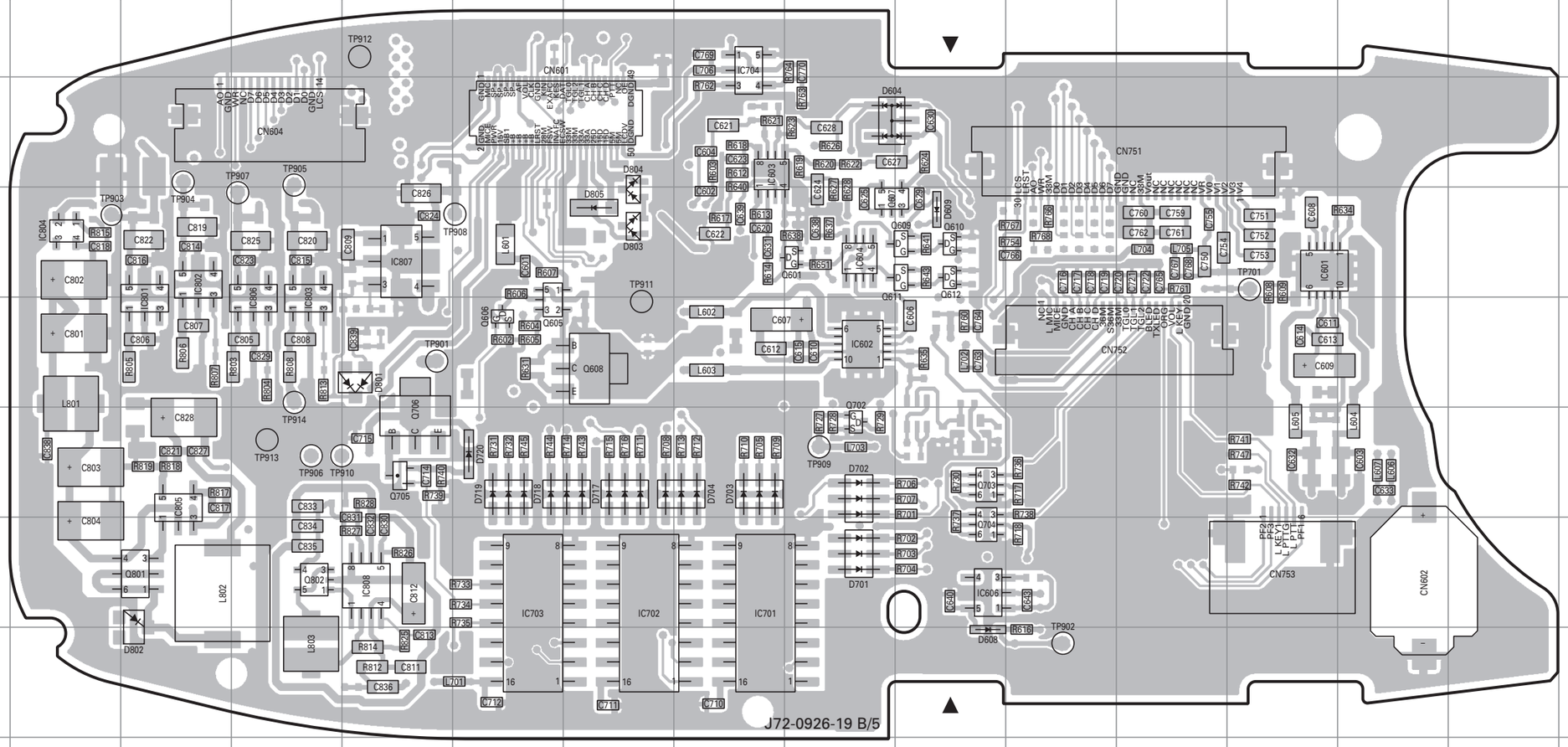

Ref. No.	Address	Ref. No.	Address	Ref. No.	Address
IC601	4M	Q601	4I	D608	8J
IC602	5I	Q605	5F	D609	4J
IC603	3H	Q606	5F	D701	7I
IC604	4I	Q607	4I	D702	6I
IC606	7J	Q608	5G	D703	6H
IC701	7H	Q609	4J	D704	6H
IC702	7G	Q610	4J	D717	6G
IC703	7F	Q611	4J	D718	6G
IC704	2H	Q612	4J	D719	6F
IC801	5C	Q702	6I	D720	6F
IC802	4C	Q703	6J	D801	5E
IC803	5D	Q704	7J	D802	8C
IC804	4B	Q705	6E	D803	4G
IC805	6C	Q706	6E	D804	3G
IC806	5D	Q801	7C	D805	4G
IC807	4E	Q802	7D		
IC808	7E	D604	3I		

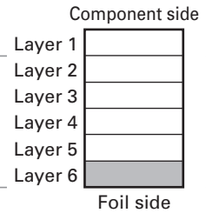

TX-RX UNIT (X57-6820-XX) (C/5) : Top section

-10 : K -11 : K2 -12 : K3 Foil side view (J72-0926-19 C/5)

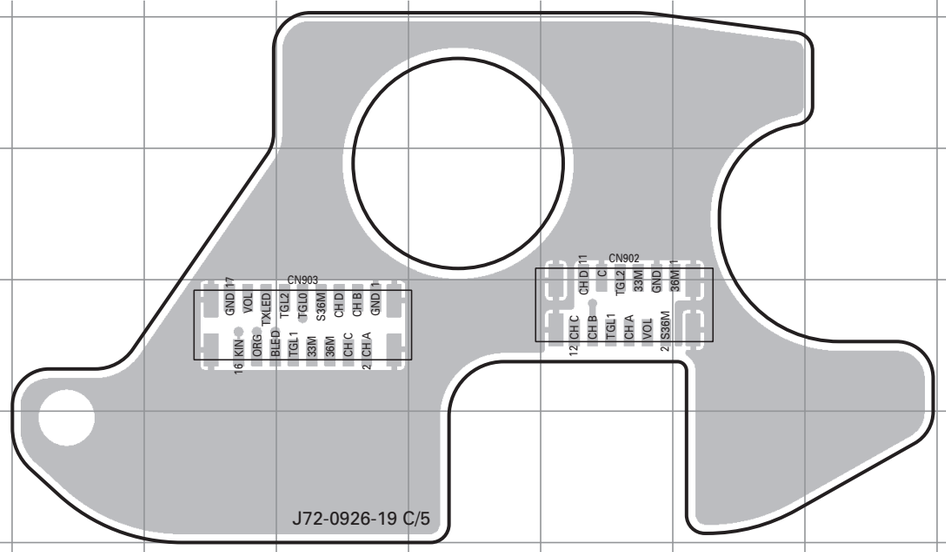

TX-RX UNIT (X57-6820-XX) (D/5) : Option section

-10 : K -11 : K2 -12 : K3
Foil side view (J72-0926-19 D/5)

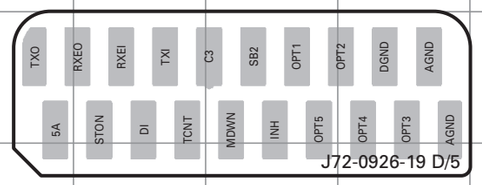

TX-RX UNIT (X57-6820-XX) (E/5) : ANT section

-10 : K -11 : K2 -12 : K3
Foil side view (J72-0926-19 E/5)

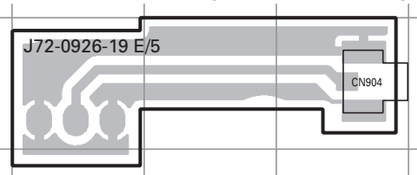

TK-5210 SCHEMATIC DIAGRAM

TX-RX UNIT :TX-RX SECTION(X57-6820-XX)(A/5)

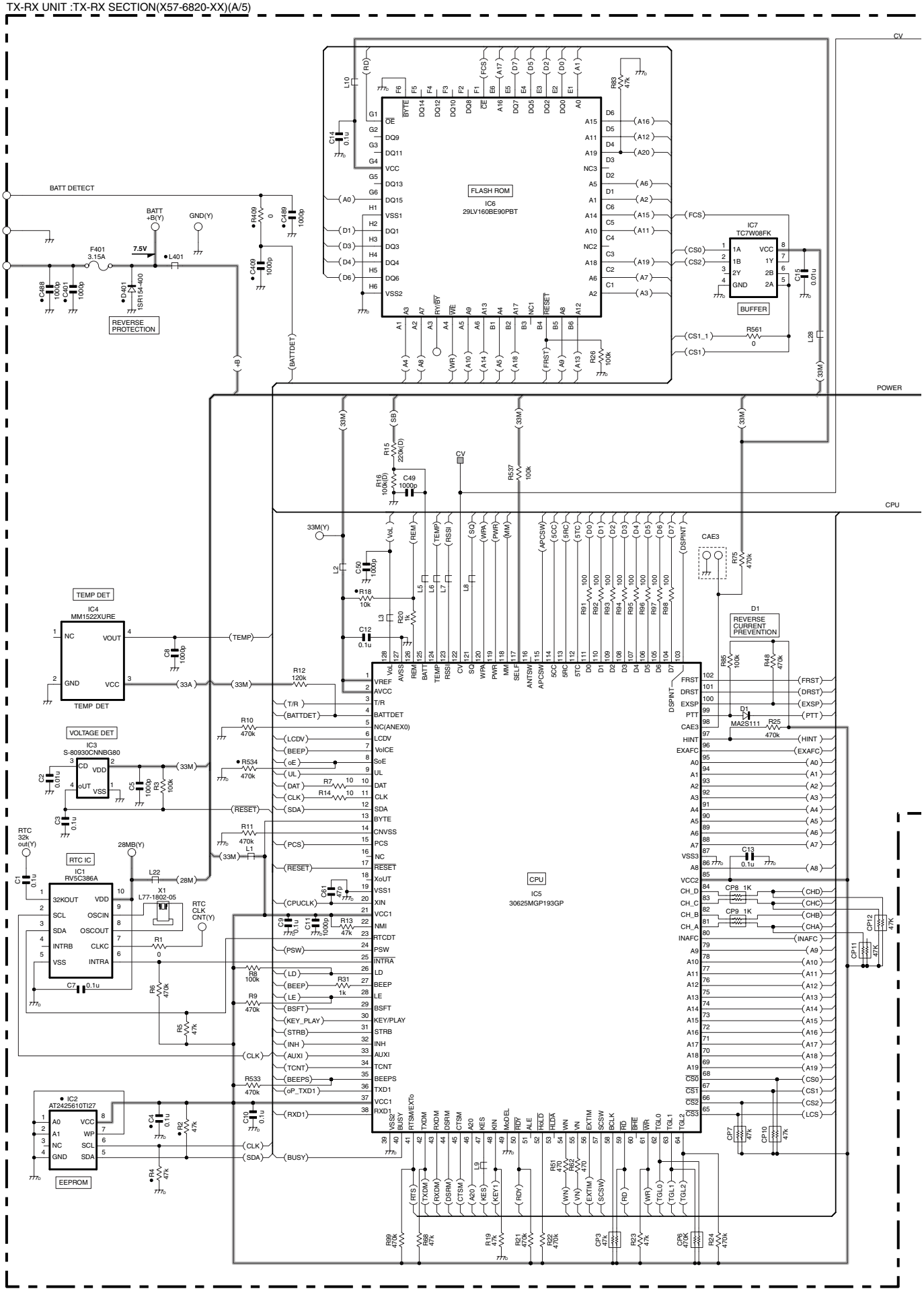

SCHEMATIC DIAGRAM TK-5210

TX-RX UNIT :TX-RX SECTION(X57-6820-XX)(A/5)

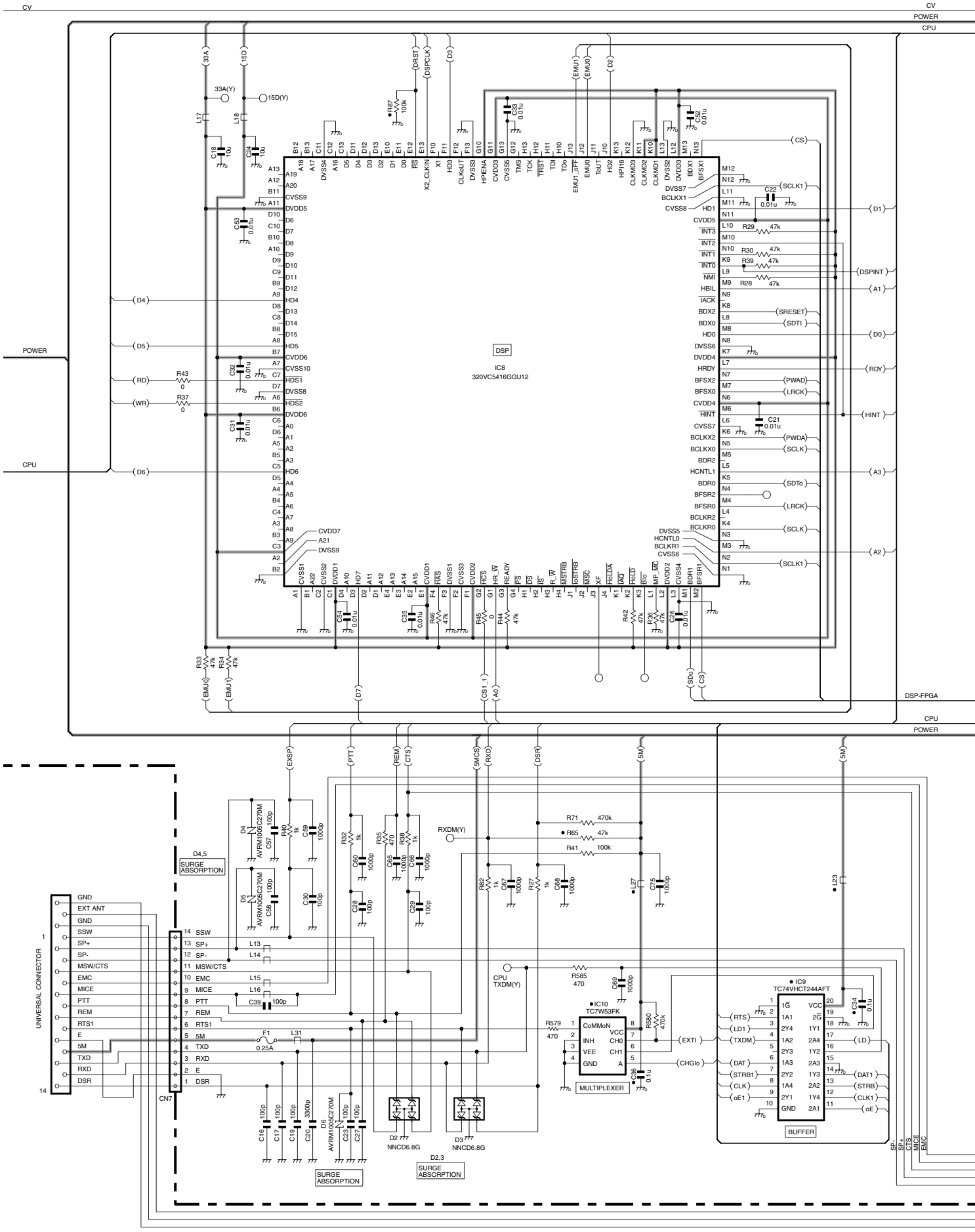

TK-5210 SCHEMATIC DIAGRAM

TX-RX UNIT :TX-RX SECTION(X57-6820-XX)(A/5)

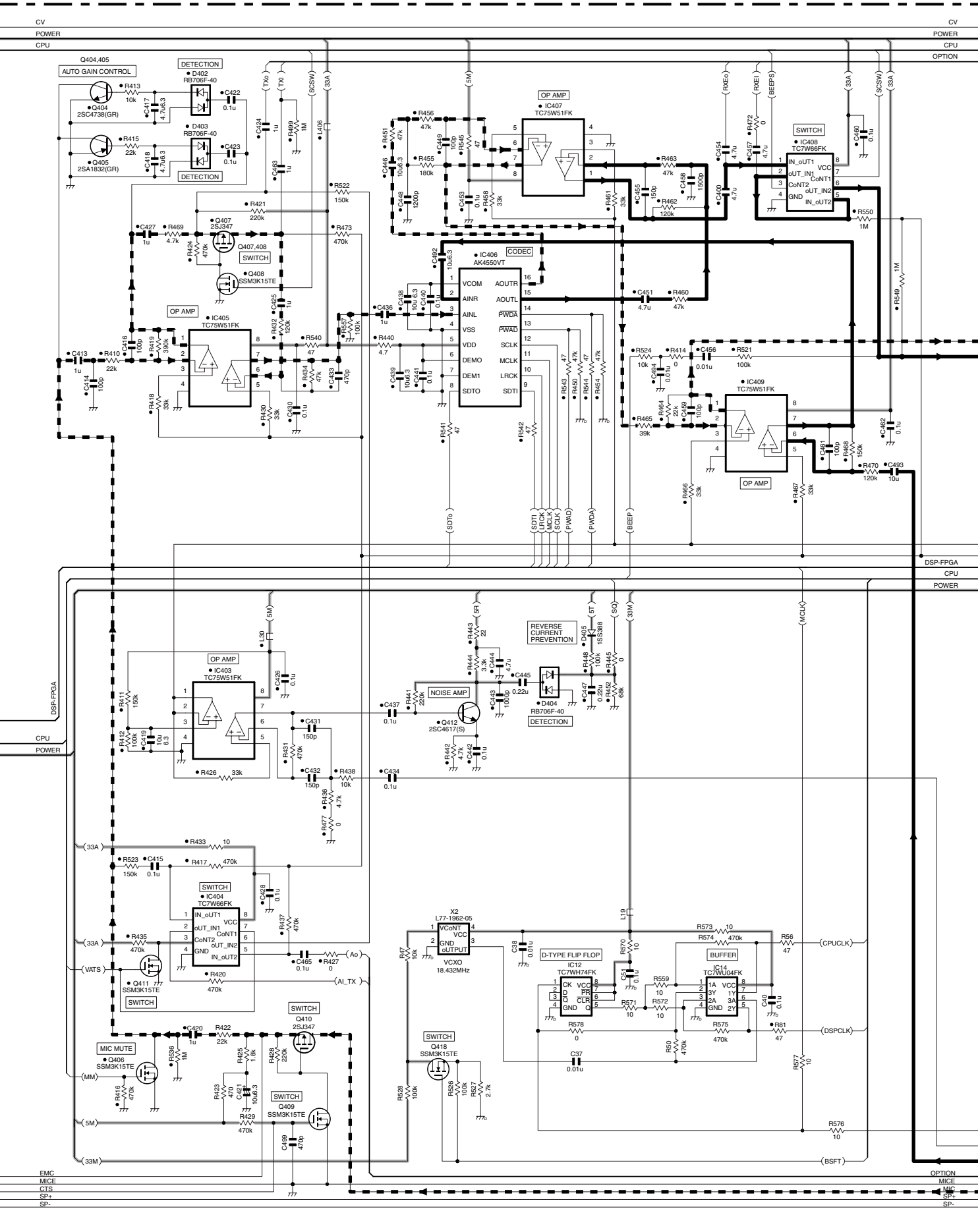

SCHEMATIC DIAGRAM TK-5210

TX-RX UNIT :TX-RX SECTION(X57-6820-XX)(A/5)

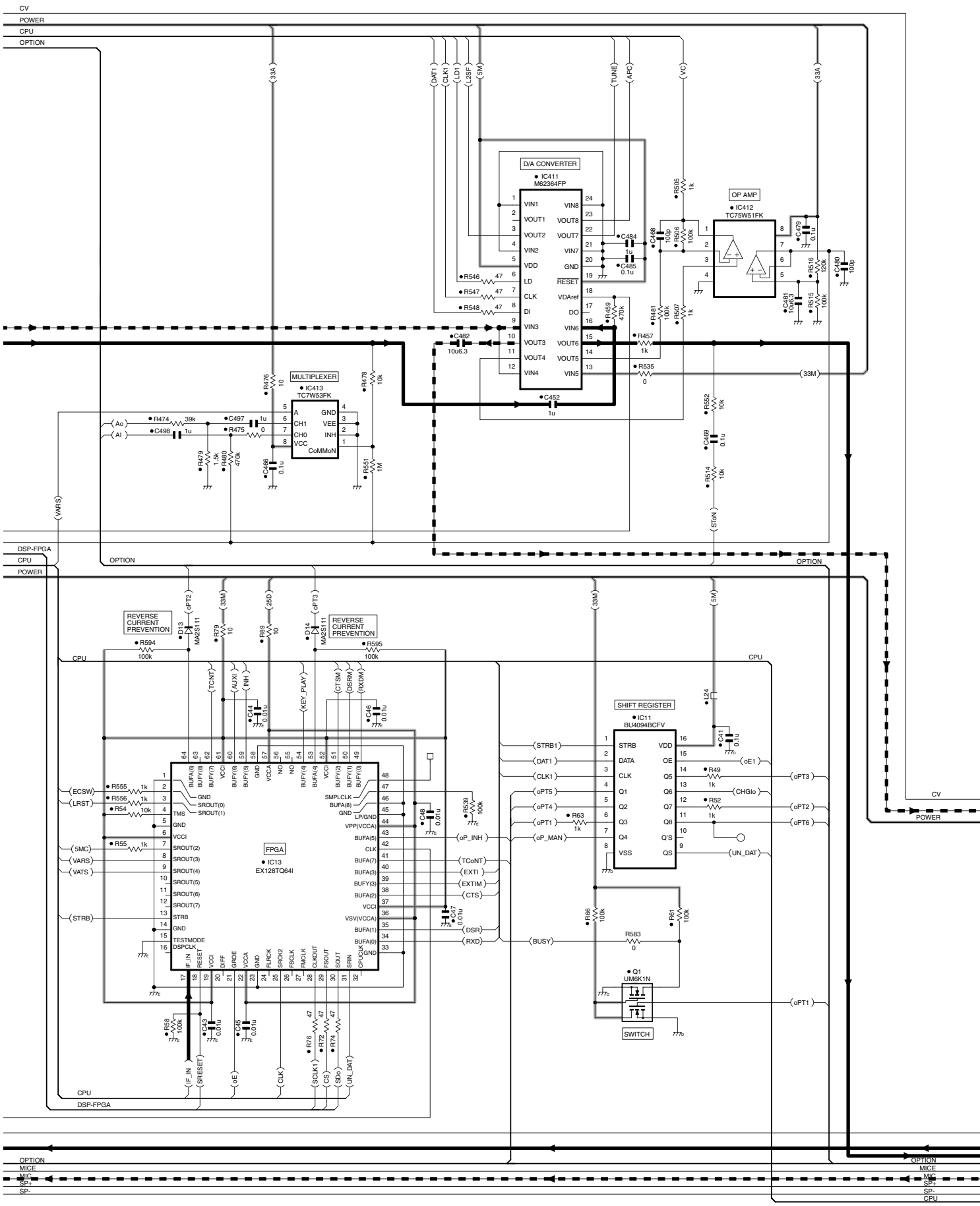

TK-5210 SCHEMATIC DIAGRAM

TX-RX UNIT :TX-RX SECTION(X57-6820-XX)(A/5)

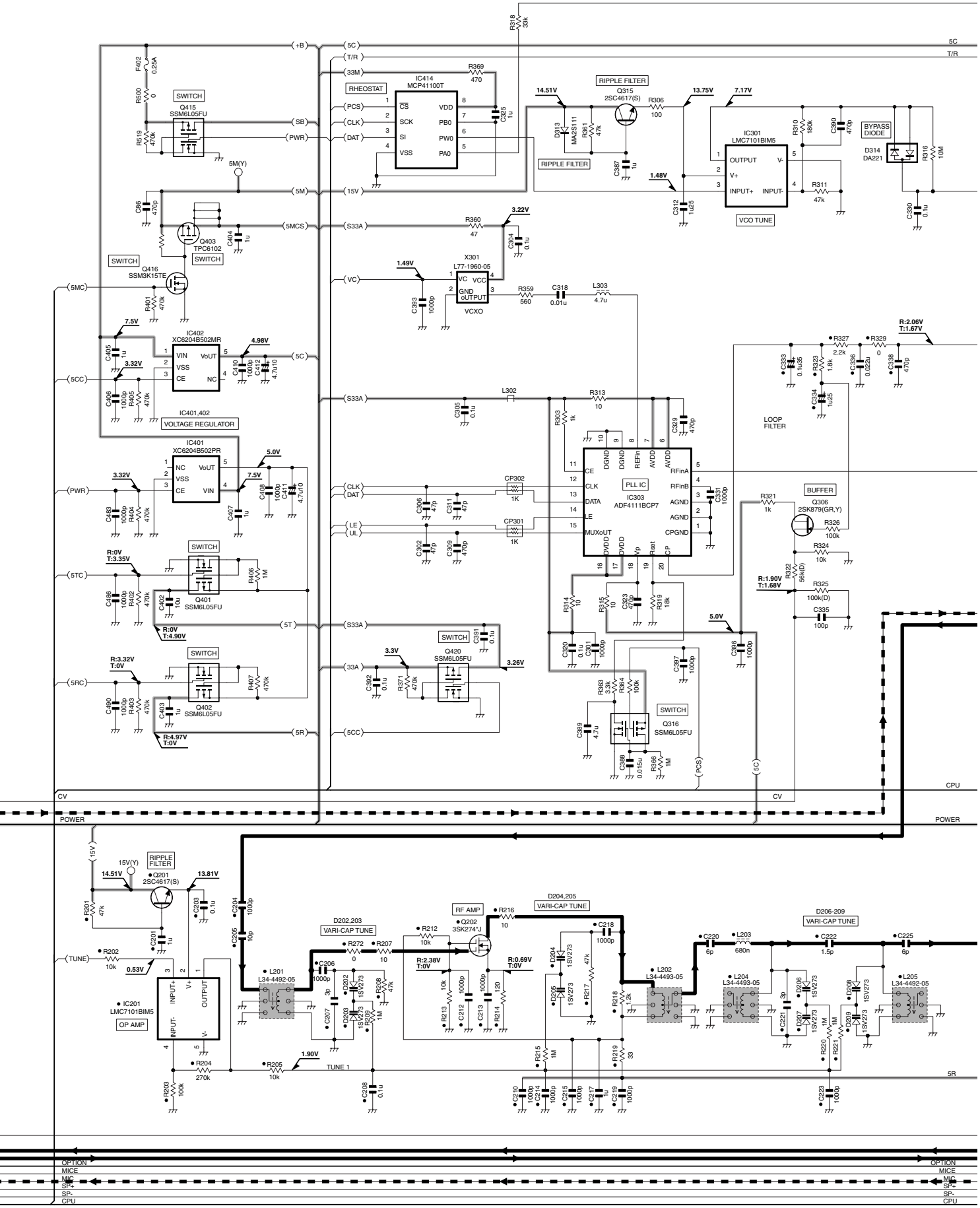

SCHEMATIC DIAGRAM TK-5210

TX-RX UNIT :TX-RX SECTION(X57-6820-XX)(A/5)

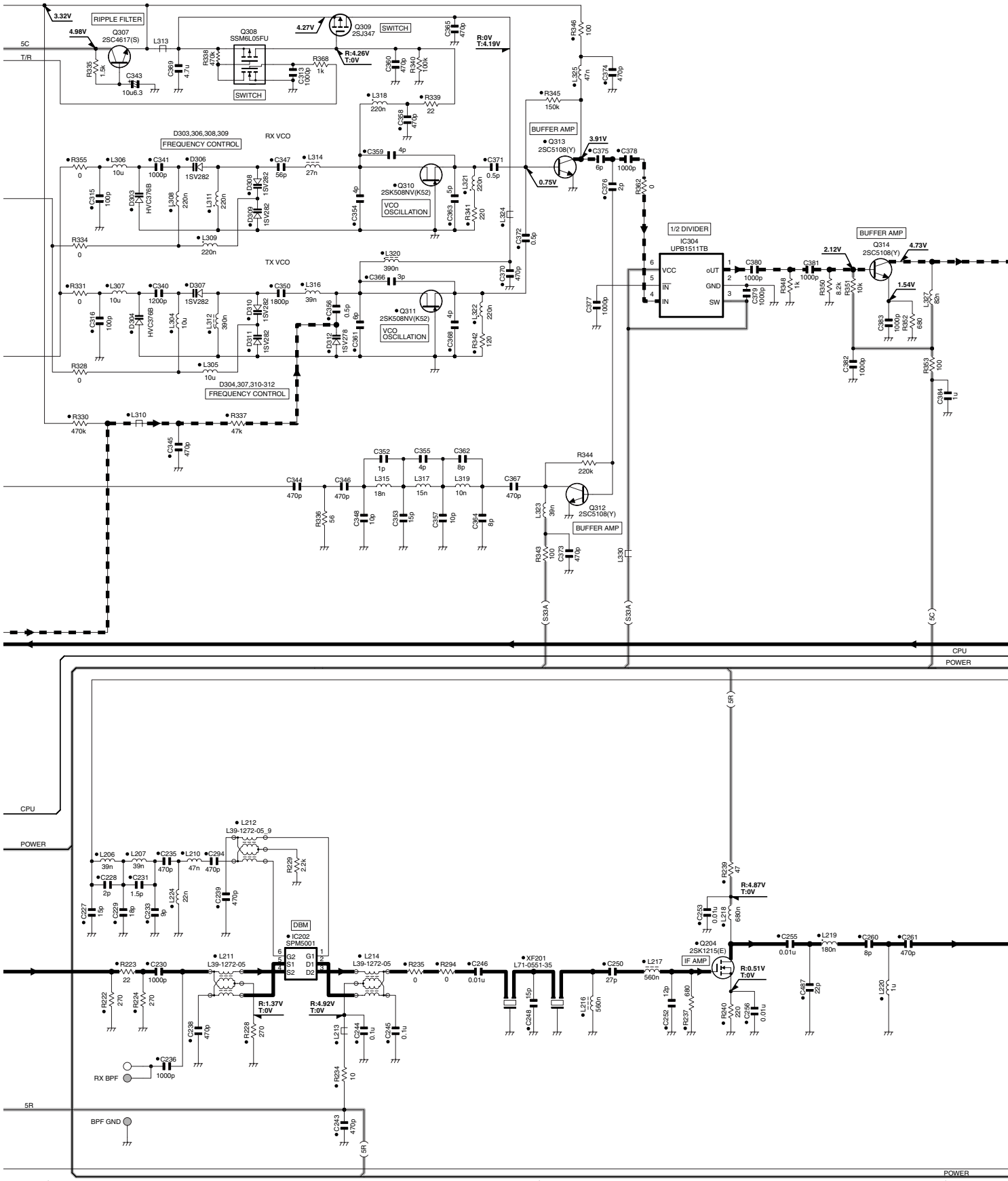

TK-5210 SCHEMATIC DIAGRAM

TX-RX UNIT :TX-RX SECTION(X57-6820-XX)(A/5)

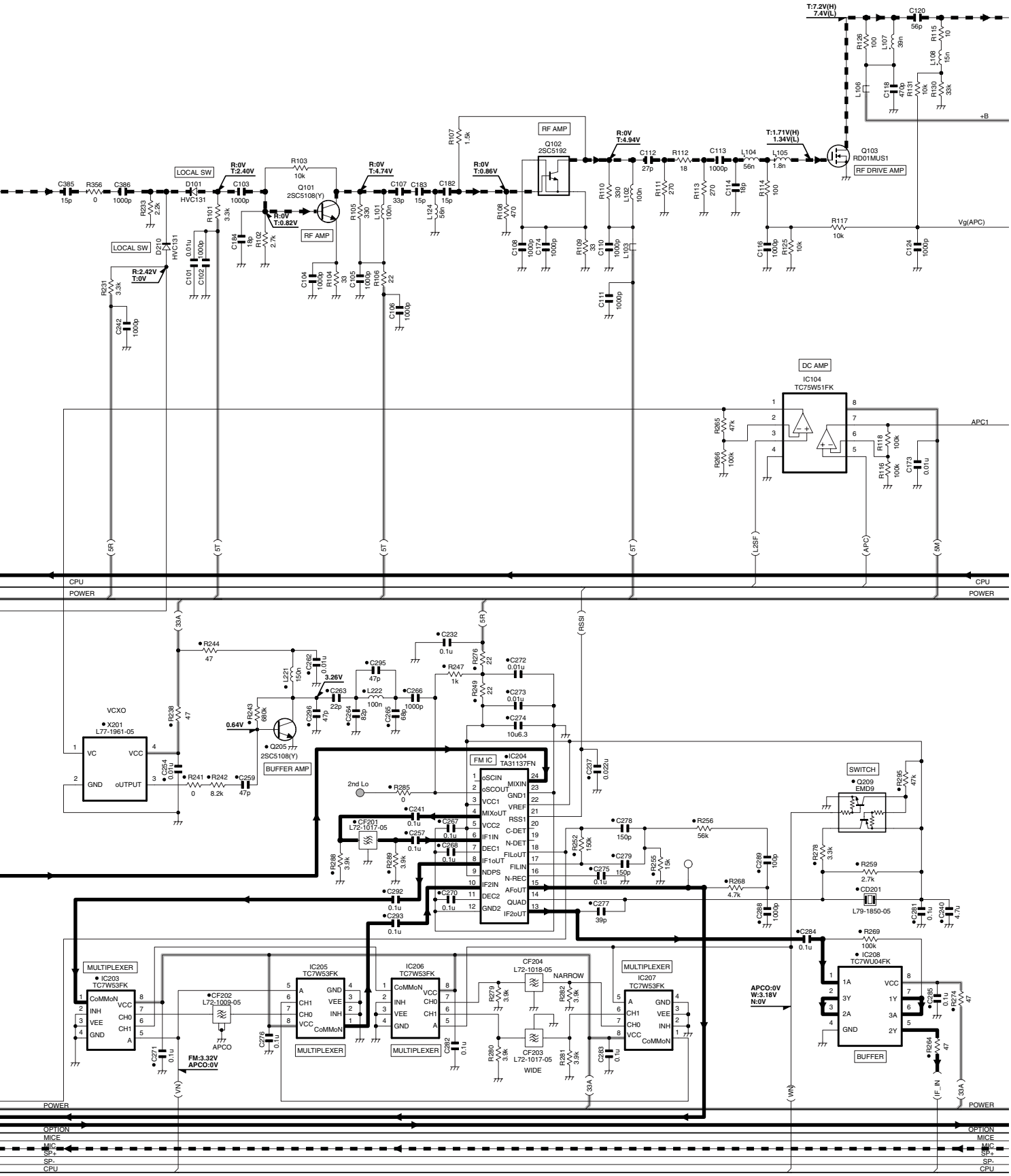

SCHEMATIC DIAGRAM TK-5210

TX-RX UNIT :TX-RX SECTION(X57-6820-XX)(A/5)

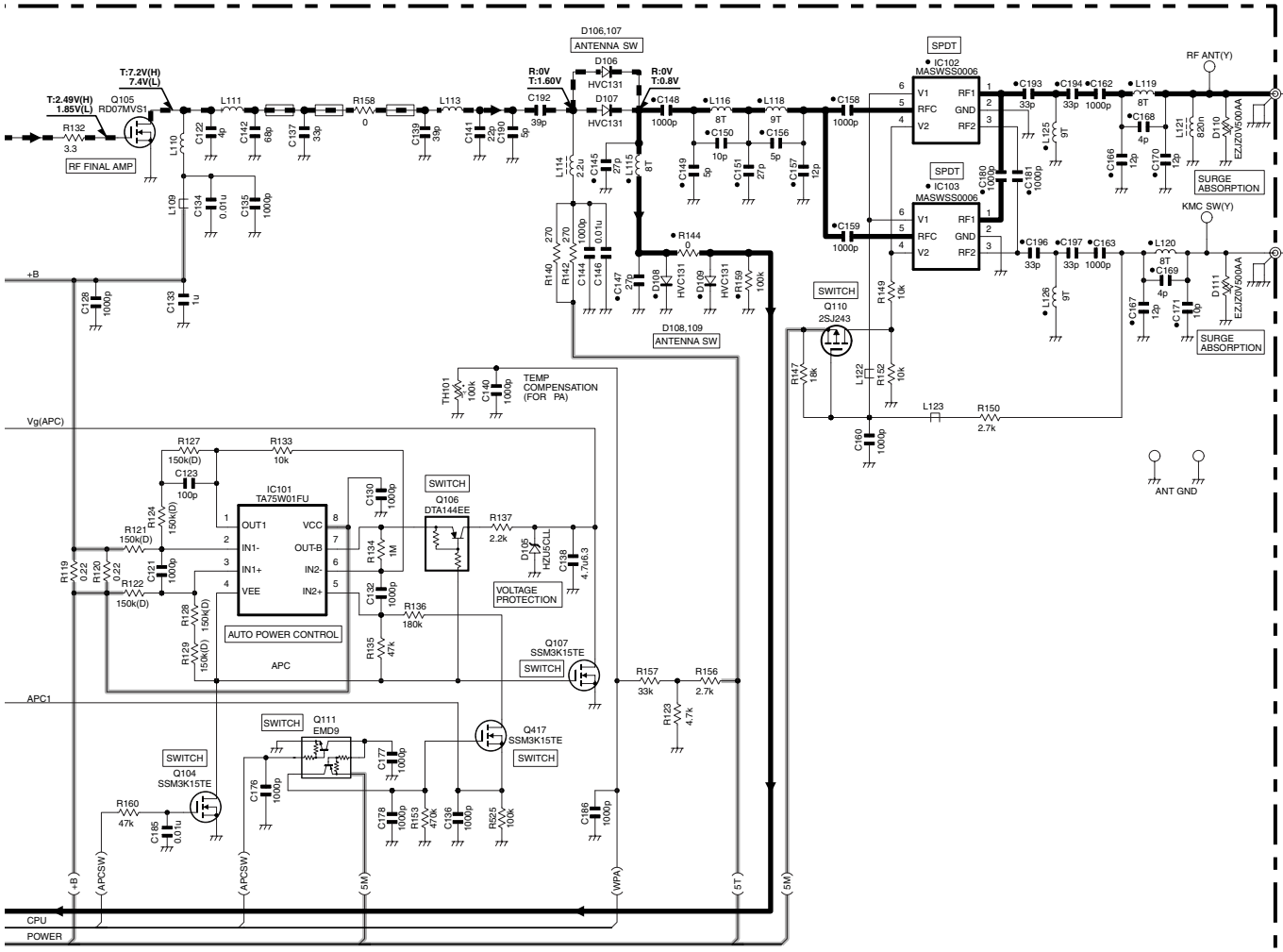

TX-RX UNIT :OPTION SECTION(X57-6820-XX)(D/5)

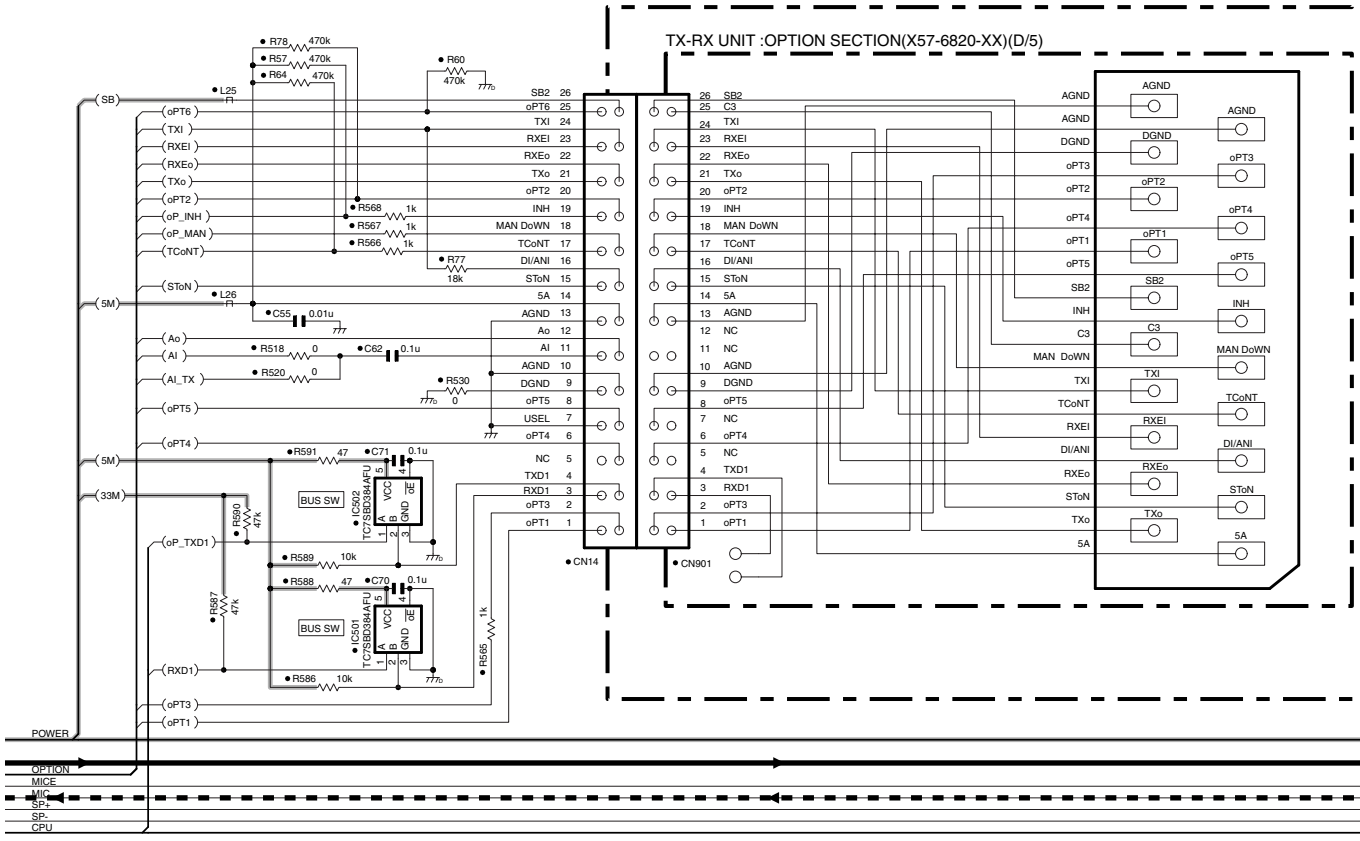

TK-5210 SCHEMATIC DIAGRAM

TX-RX UNIT :ANT SECTION
(X57-6820-XX)(E/5)

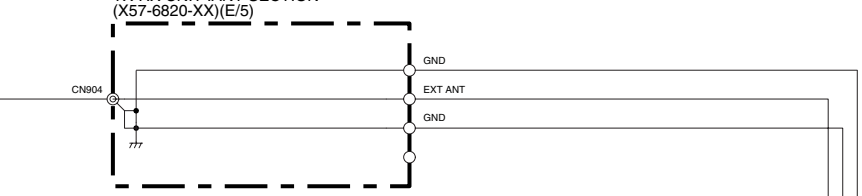

TX-RX UNIT :TX-RX SECTION(X57-6820-XX)(A/5)

X57-6820-XX		CN19	R491	R492	R493	R494	R495	R496	R497	R498	R501	R503	R517
-10	K	NO	NO	NO	NO	NO	NO	NO	NO	NO	NO	NO	NO
-11	K2	E40-6431-05	100	100	100	100	100	100	100	100	100	100	100
-12	K3	E40-6431-05	100	100	100	100	100	100	100	100	100	100	100

TX-RX UNIT :CONTROL SECTION(X57-6820-XX)(B/5)

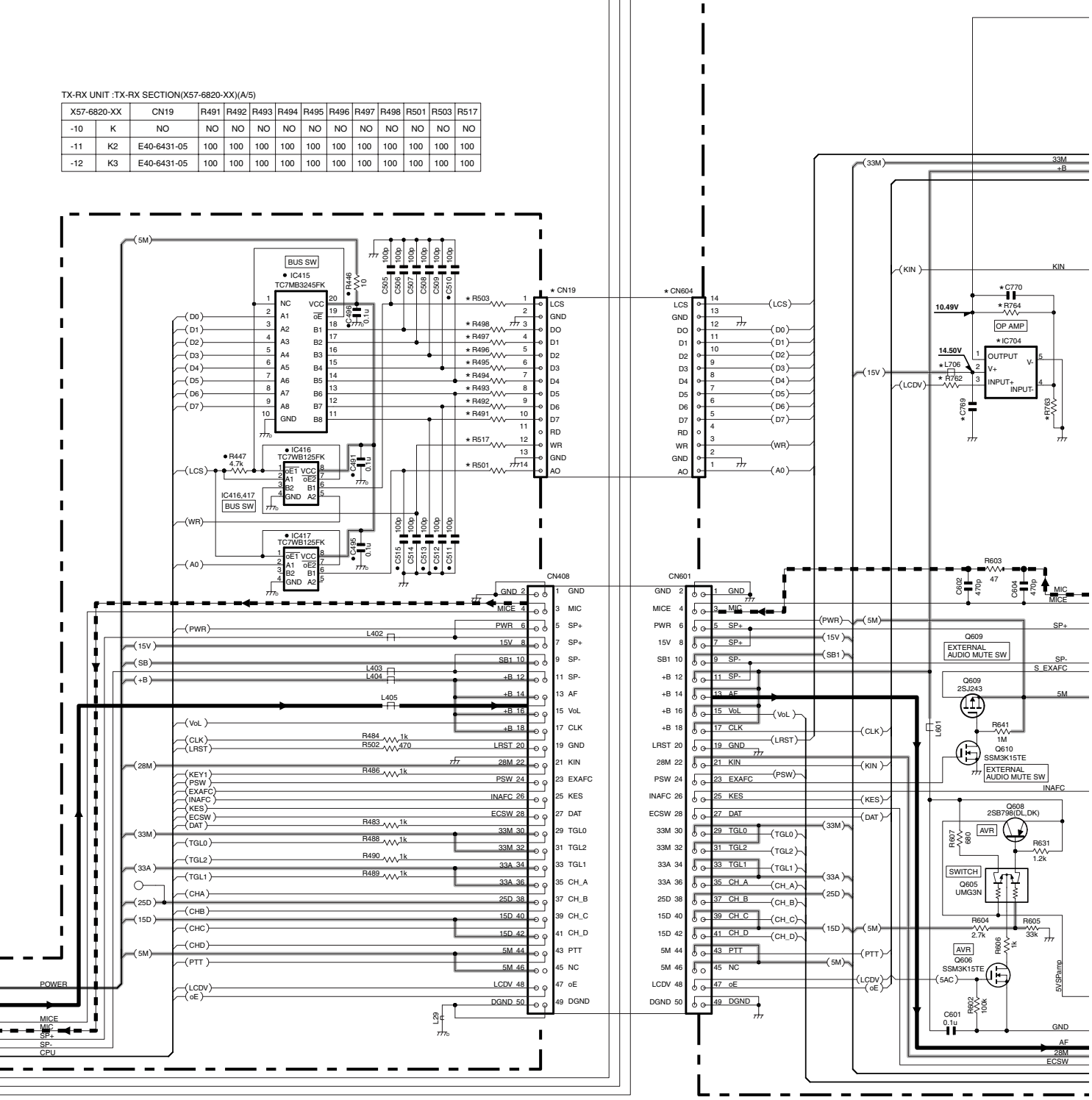

SCHEMATIC DIAGRAM TK-5210

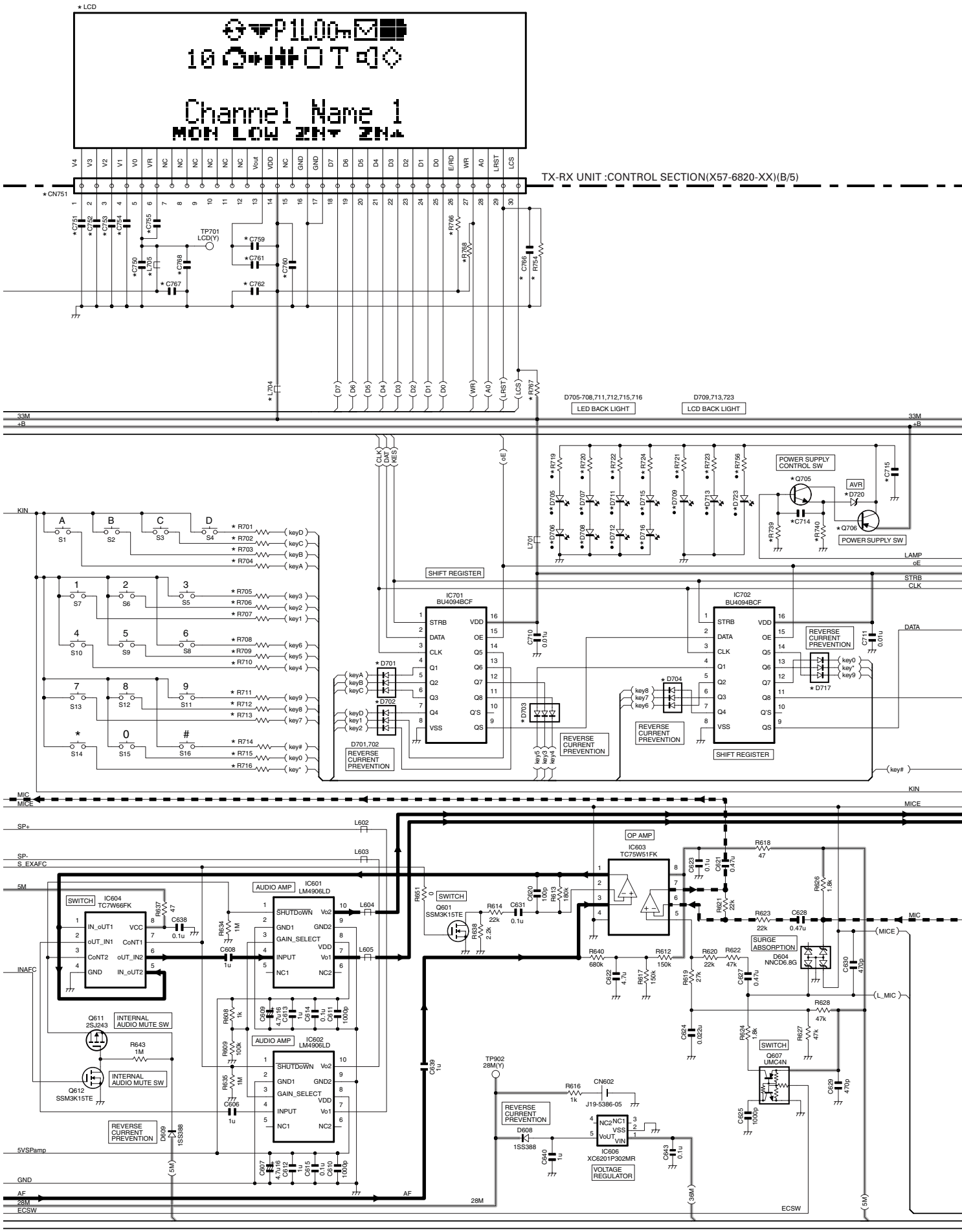

TK-5210 SCHEMATIC DIAGRAM

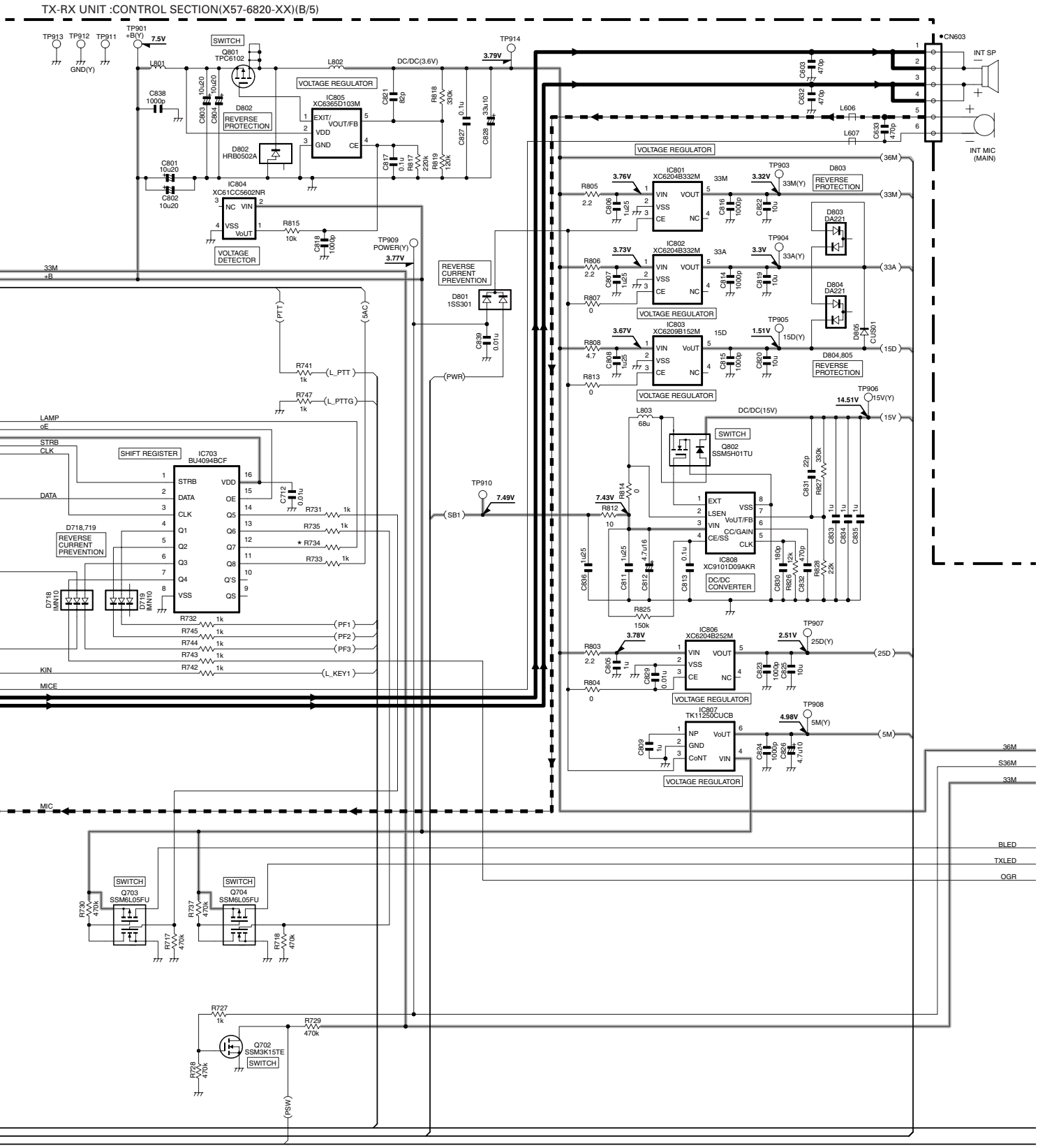

SCHEMATIC DIAGRAM TK-5210

TX-RX UNIT :CONTROL SECTION(X57-6820-XX)(B/5)

X57-6820-XX		LCD	CN604	CN751	D701	D702	D703	D704	D705	D706	D707	D708	D709	D711	D712	D713
-10	K	NO	NO	NO	NO	NO	NO	NO	NO	NO	NO	NO	NO	NO	NO	NO
-11	K2	YES	E40-6431-05	E40-6337-05	IMN10	IMN10	NO	NO	B30-2171-05	B30-2171-05	NO	NO	B30-2261-05	NO	NO	B30-2261-05
-12	K3	YES	E40-6431-05	E40-6337-05	IMN10	IMN10	IMN10	IMN10	B30-2171-05	B30-2171-05	B30-2171-05	B30-2171-05	B30-2261-05	B30-2171-05	B30-2171-05	B30-2261-05

X57-6820-XX		D715	D716	D717	D720	D723	IC704	Q705	Q706	L704	L705	L706	R701	R702	R703	R704
-10	K	NO	NO	NO	NO	NO	NO	NO	NO	NO	NO	NO	NO	NO	NO	NO
-11	K2	NO	NO	NO	DTZ3.9(B)	B30-2261-05	LM7101BIM5	2SC4617(S)	2SB798(DL,DK)	L92-0446-05	L92-0446-05	L92-0446-05	1k	1k	1k	1k
-12	K3	B30-2171-05	B30-2171-05	IMN10	DTZ3.9(B)	B30-2261-05	LM7101BIM5	2SC4617(S)	2SB798(DL,DK)	L92-0446-05	L92-0446-05	L92-0446-05	1k	1k	1k	1k

X57-6820-XX		R705	R706	R707	R708	R709	R710	R711	R712	R713	R714	R715	R716	R719	R720	R721	R722	R723	R724	R734	R739	R740	R754	R756	R762	R763
-10	K	NO	NO	NO	NO	NO	NO	NO	NO	NO	NO	NO	NO	NO	NO	NO	NO	NO	NO	NO	NO	NO	NO	NO	NO	NO
-11	K2	NO	NO	NO	NO	NO	NO	NO	NO	NO	NO	NO	NO	100	100	180	NO	180	NO	1k	470k	2.2k	470k	180	1k	33k
-12	K3	1k	1k	1k	1k	1k	1k	1k	1k	1k	1k	1k	1k	100	100	180	100	180	100	1k	470k	2.2k	470k	180	1k	33k

X57-6820-XX		R764	R766	R767	R768	C714	C715	C750	C751	C752	C753	C754	C755	C759	C760	C761	C762	C766	C767	C768	C769	C770
-10	K	NO	NO	NO	NO	NO	NO	NO	NO	NO	NO	NO	NO	NO	NO	NO	NO	NO	NO	NO	NO	NO
-11	K2	100k	22k	22k	22k	100p	0.1u	0.47u	0.47u	0.47u	0.47u	0.47u	0.01u	1u	1u	1u	1u	1000p	0.01u	1000p	0.01u	470p
-12	K3	100k	22k	22k	22k	100p	0.1u	0.47u	0.47u	0.47u	0.47u	0.47u	0.01u	1u	1u	1u	1u	1000p	0.01u	1000p	0.01u	470p

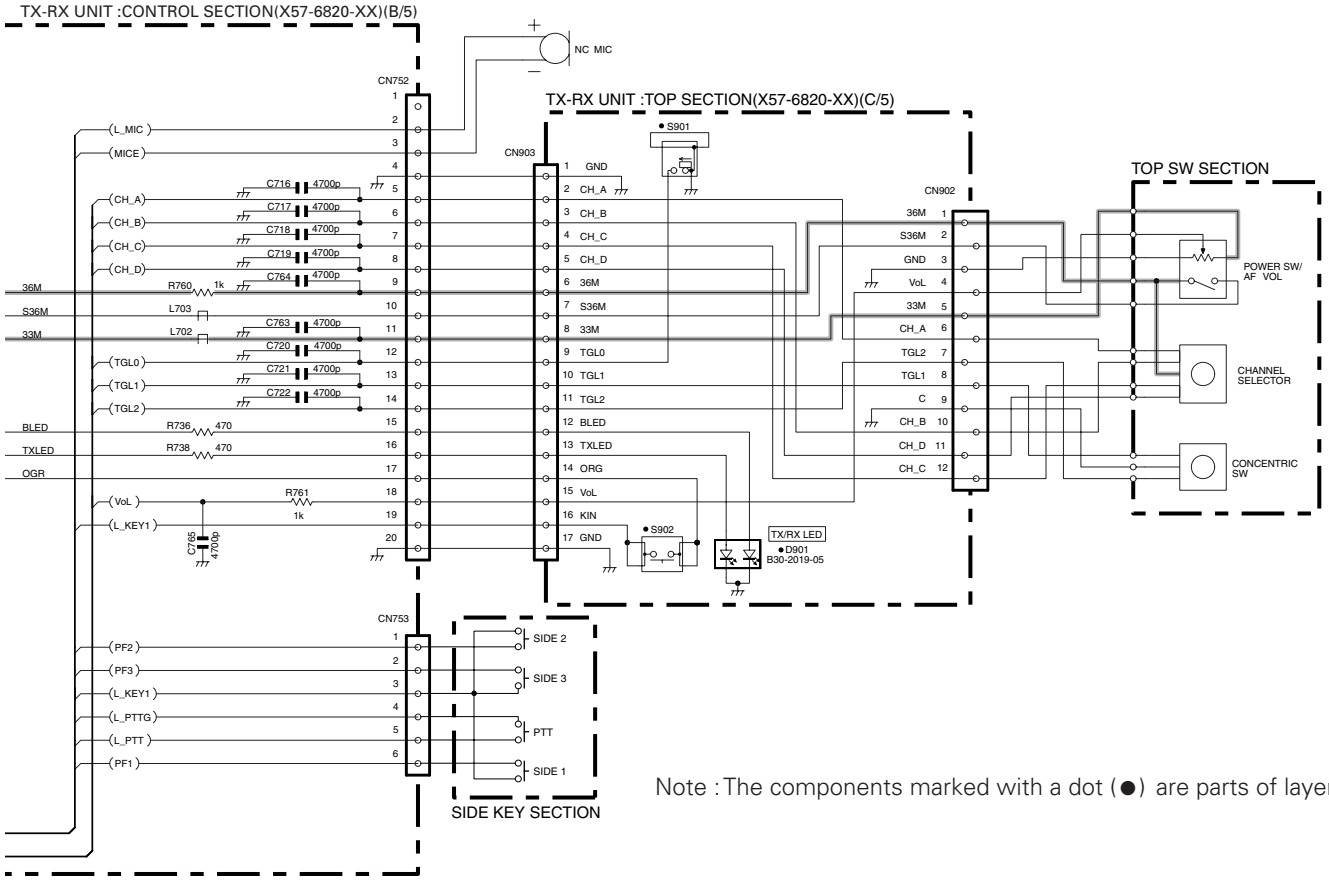

Note : The components marked with a dot (●) are parts of layer1.

TK-5210 SCHEMATIC DIAGRAM

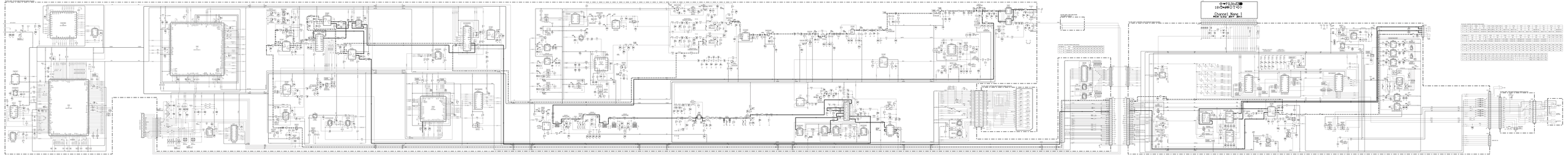

INTERCONNECTION DIAGRAM

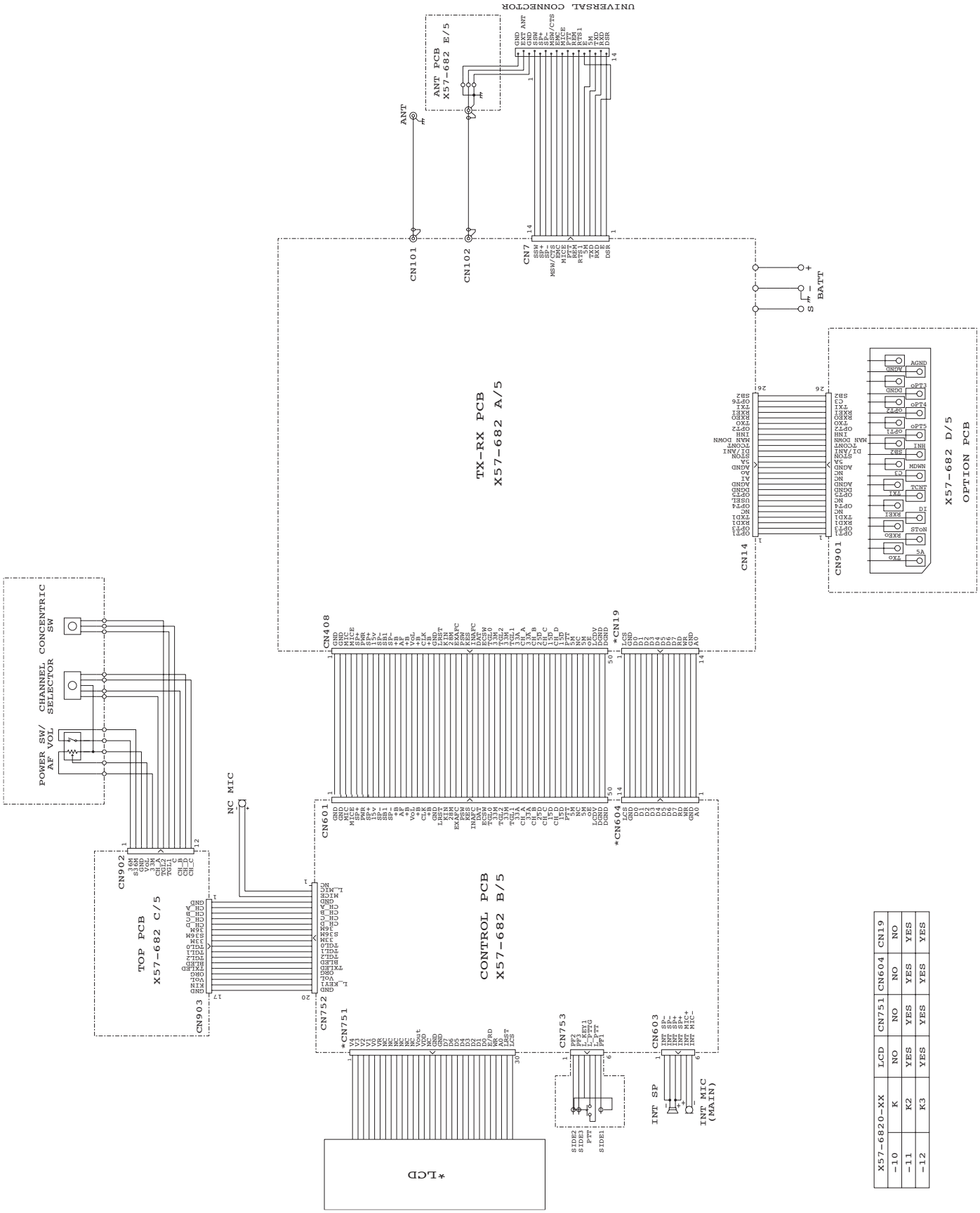

X57-6820-XX	LCD	CN751	CN604	CN19
-10	NO	NO	NO	NO
-11	YES	YES	YES	YES
-12	YES	YES	YES	YES

BLOCK DIAGRAM

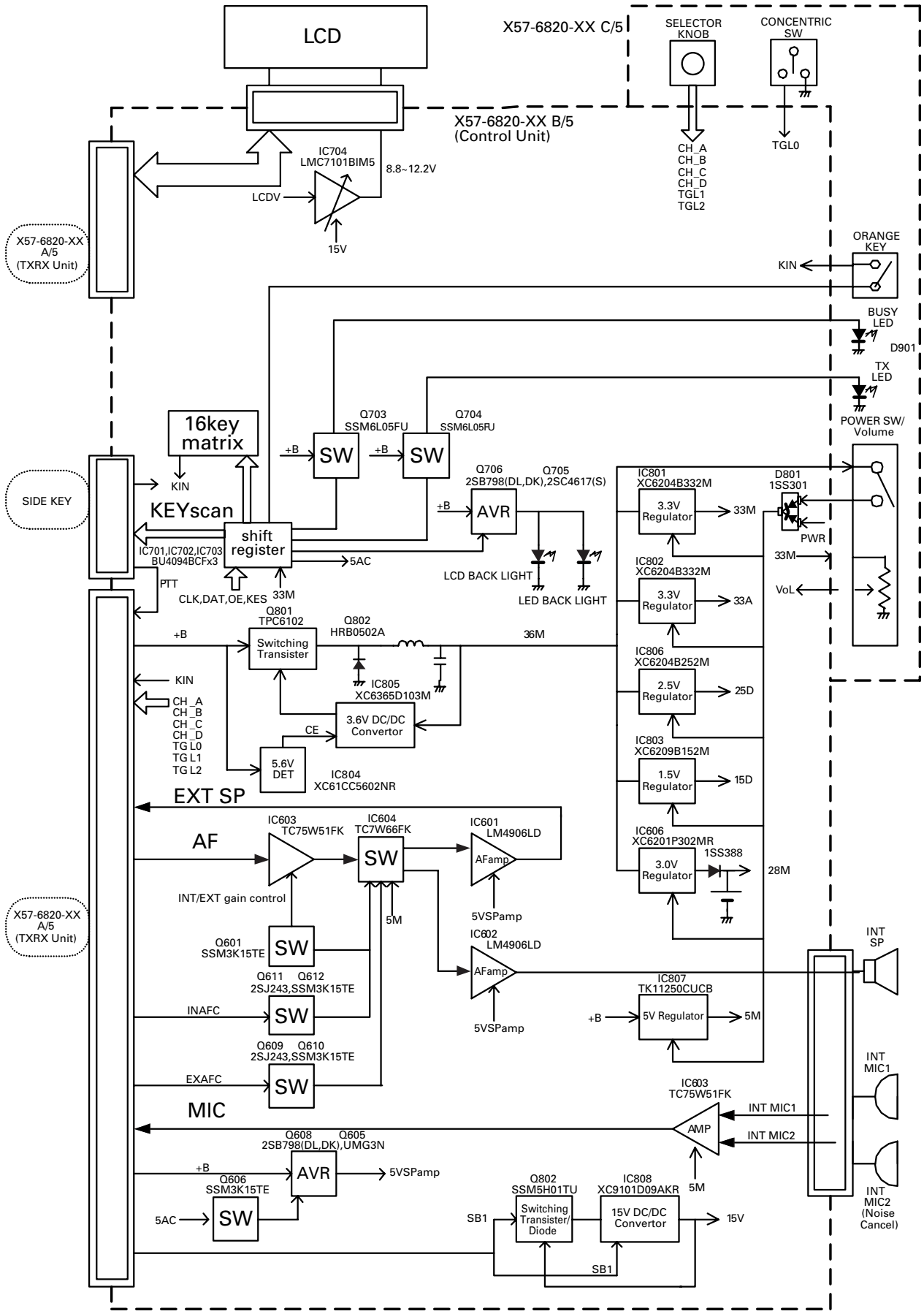

BLOCK DIAGRAM

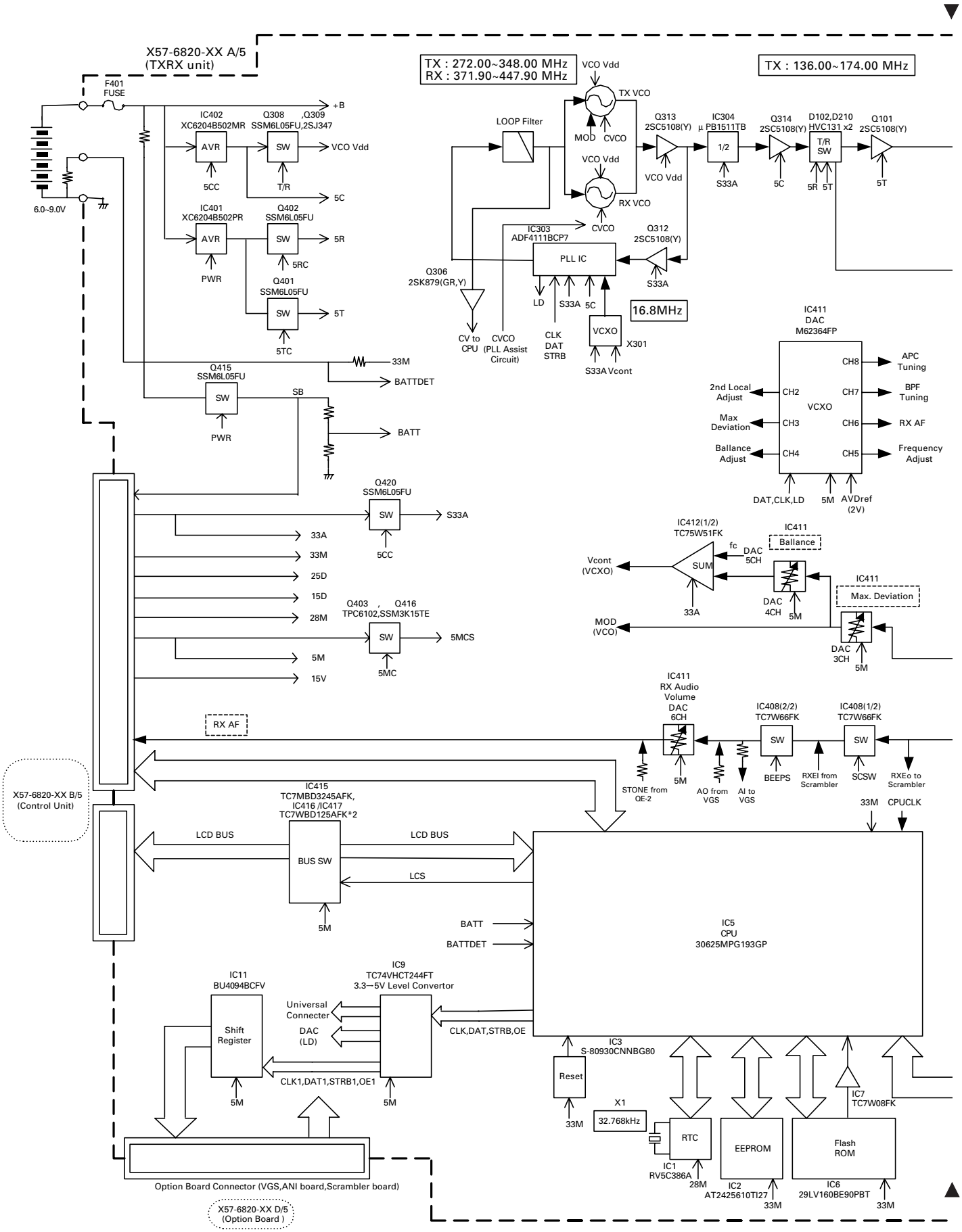

BLOCK DIAGRAM

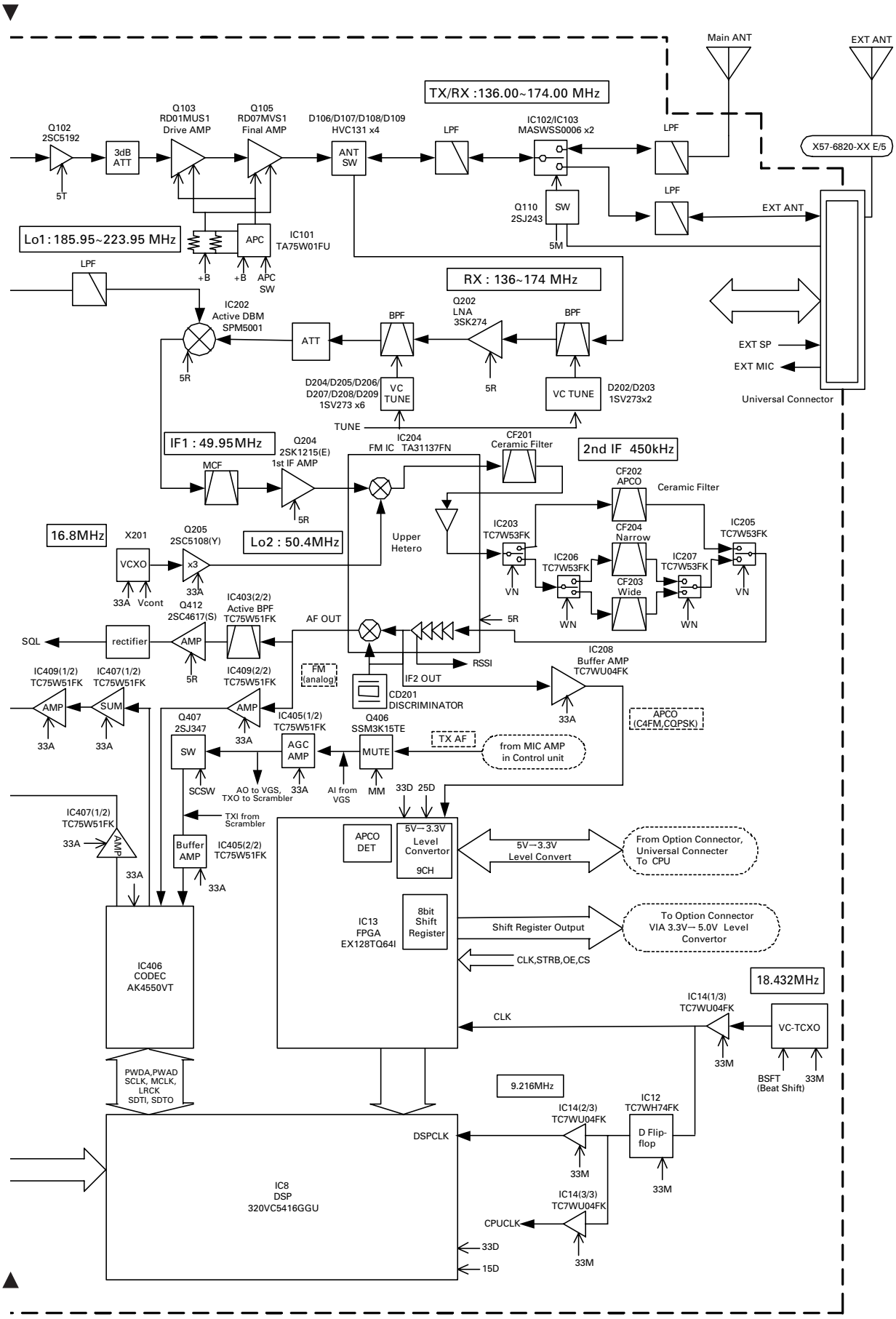

LEVEL DIAGRAM

Receiver Section

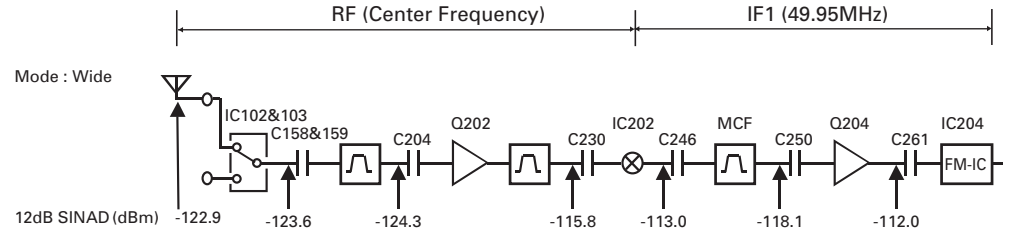

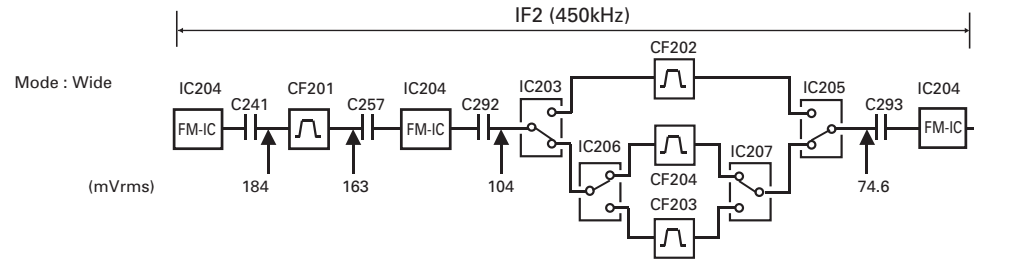

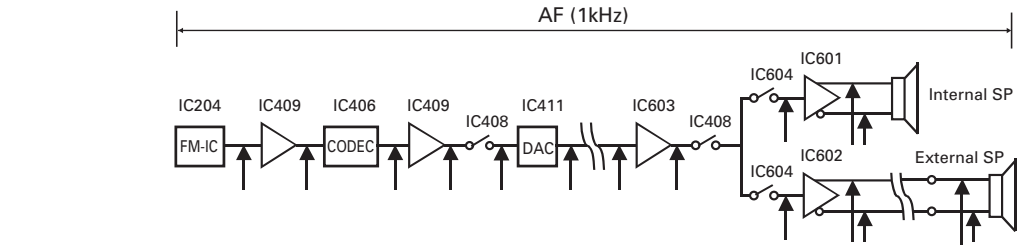

Internal	Wide(mVrms)	143	210	88.5	340	333	83.5	83.1	530	527	2000	-
	Narrow(mVrms)	157	229	97.5	371	364	83.7	83.1	533	530	2000	-
External	Wide(mVrms)	-	-	-	-	-	-	-	696	693	2700	2000
	Narrow(mVrms)	-	-	-	-	-	-	-	685	682	2700	2000

To make measurements in the AF section, connect the AC level meter. (ANT input: -47dBm, 1kHz FM, 3kHz DEV (Wide), 1.5kHz DEV (Narrow))
In the RF section, use 1000pF coupling capacitor.
(The display shows the SSG input value required to obtain 12dB SINAD without local level.)

Transmitter Section

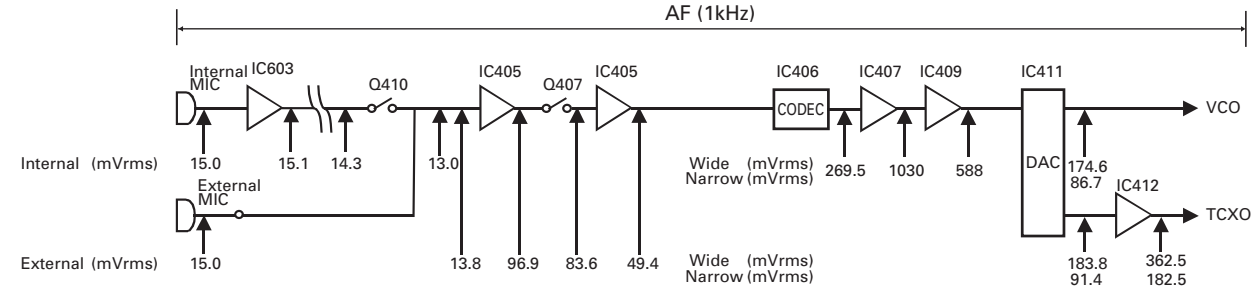

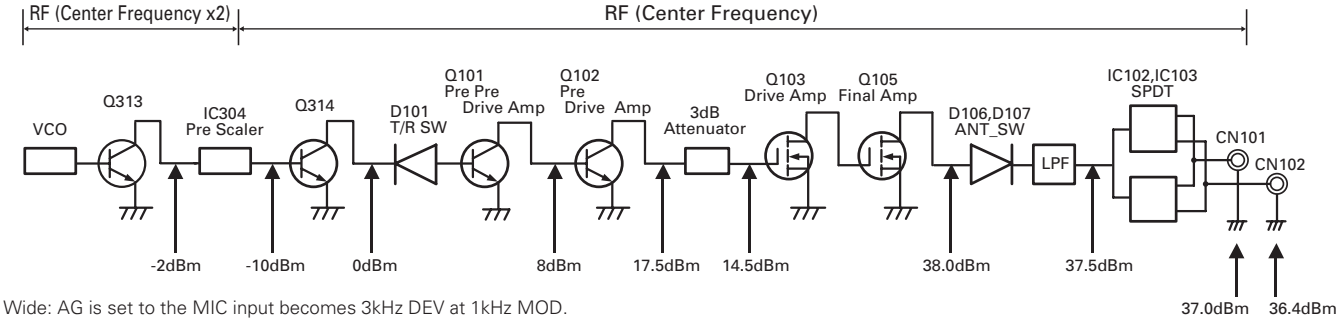

Wide: AG is set to the MIC input becomes 3kHz DEV at 1kHz MOD.
Narrow: AG is set to the MIC input becomes 1.5kHz DEV at 1kHz MOD.
To make measurements in the AF section, connect the AC level meter.
In the RF section,use 1000pF coupling capacitor.

OPTIONAL ACCESSORIES

KNB-31A (Ni-Cd 7.2V 1700mAh)
KNB-32N (Ni-MH 7.2V 2500mAh)

■ **External view**

■ **KNB-31A Internal wiring**

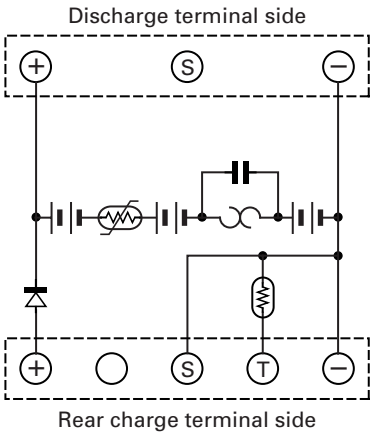

■ **KNB-32N Internal wiring**

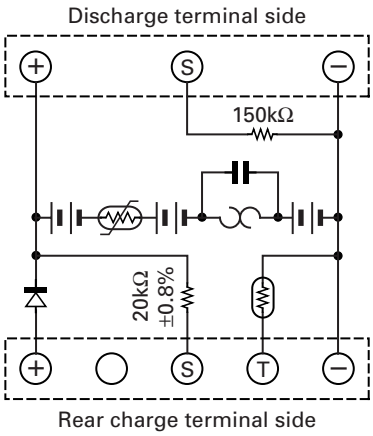

KNB-33L (Li-ion 7.4V 1700mAh)

■ **External view**

■ **Internal wiring**

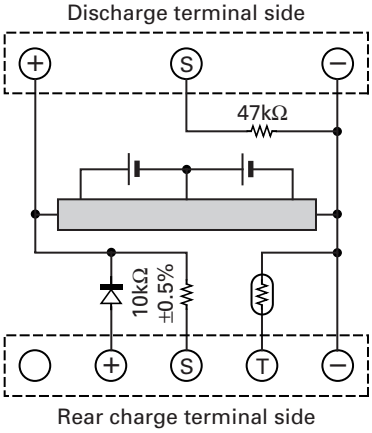

KSC-32 (Rapid charger)

■ **External view**

TK-5210

SPECIFICATIONS

GENERAL

Models	K : Basic Model K2 : 4-Key w/LCD Model K3 : Full Key w/LCD Model
Frequency Range	136~174 MHz
Number of Channels	512
Zones	50
Max. Channels per Zone	250
Channel Spacing	Analog : 12.5/15/20/25/30 kHz Digital : 12.5 kHz
Operating Voltage	7.5V DC ± 20%
Battery Life (5-5-90 duty cycle)	KNB-31A, 7.5VDC, 1700 mAh : 8 hours KNB-32N, 7.5VDC, 2500 mAh : 12 hours KNB-33L, 7.5VDC, 1700 mAh : 8 hours
Operating Temperature Range	–22°F to +140°F (–30°C to +60°C)
Frequency Stability (–22°F to +140°F)	±2.0 ppm
Antenna Impedance	50Ω
Dimensions (W x H x D) (Projections not included)	2-5/16 x 6-3/32 x 1-13/16 in. (58 x 155 x 45.7 mm) with KNB-31A or KNB-32N battery 2-5/16 x 6-3/32 x 1-9/16 in. (58 x 155 x 39.2 mm) with KNB-33L battery
Weight	
Radio only	TK-5210 K : 11.11 oz. (315g) TK-5210 K2 : 11.64 oz. (330g) TK-5210 K3 : 11.64 oz. (330g)
TK-5210 K2 with battery, antenna(KRA-22) and belt clip(KBH-11)	22.22 oz. (630g) with KNB-31A battery 23.28 oz. (660g) with KNB-32N battery 17.64 oz. (500g) with KNB-33L battery

RECEIVER

Sensitivity	Digital (5% BER) : 0.25µV Digital(1% BER) : 0.40µV Analog 12dB SINAD : 0.25µV
Selectivity	Digital : -60dB Analog @25/30kHz : -78dB Analog @12.5kHz : -67dB
Intermodulation Distortion	Digital : -75dB Analog @25/30kHz : -75dB Analog @12.5kHz : -68dB
Spurious and Image	Digital : -80dB Analog :- 80dB
Audio Distortion	Digital : Less than 1.5% Analog : Less than 2%
Audio Output	500mW/ 8Ω

TRANSMITTER

RF Output Power	5W / 1W
Spurious and Harmonics	70dB
FM Hum and Noise	Analog @25kHz : 50dB Analog @12.5kHz : 45dB
Audio Distortion	Less than 2%
Modulation	16K0F3E, 11K0F3E, 8K10F1E, 8K10F1D

Analog measurements made per TIA/EIA-603
Digital measurements made per TIA/EIA-102CAAA
KENWOOD reserves the right to change specifications without prior notice or obligation.

KENWOOD CORPORATION

2967-3, Ishikawa-machi, Hachioji-shi, Tokyo 192-8525, Japan

KENWOOD U.S.A. CORPORATION
P.O. BOX 22745, 2201 East Dominguez Street, Long Beach, CA 90801-5745, U.S.A.

KENWOOD ELECTRONICS CANADA INC.
6070 Kestrel Road, Mississauga, Ontario, Canada L5T 1S8

KENWOOD ELECTRONICS DEUTSCHLAND GMBH
Rembrücker Str. 15, 63150 Heusenstamm, Germany

KENWOOD ELECTRONICS BELGIUM N.V.
Leuvensesteenweg 248 J, 1800 Vilvoorde, Belgium

KENWOOD ELECTRONICS FRANCE S.A.
13, Boulevard Ney, 75018 Paris, France

KENWOOD ELECTRONICS U.K. LIMITED
KENWOOD House, Dwight Road, Watford, Herts., WD18 9EB, United Kingdom

KENWOOD ELECTRONICS EUROPE B.V.
Amsterdamseweg 37, 1422 AC Uithoorn, The Netherlands

KENWOOD ELECTRONICS ITALIA S.p.A.
Via G. Sirtori, 7/9 20129 Milano, Italy

KENWOOD IBERICA S.A.
Bolivia, 239-08020 Barcelona, Spain

KENWOOD ELECTRONICS AUSTRALIA PTY. LTD.
(A.C.N. 001 499 074)
16 Giffnock Avenue, Centrecourt Estate, North Ryde, N.S.W. 2113, Australia

KENWOOD ELECTRONICS (HONG KONG) LTD.
Unit 3712-3724, Level 37, Tower one Metroplaza, 223 Hing Fong Road, Kwai Fong, N.T., Hong Kong

KENWOOD ELECTRONICS SINGAPORE PTE LTD.
1 Ang Mo Kio Street 63, Singapore 569110

100%